International Conference on Recent Innovations in Engineering and Management
Dhananjay Mahadik Group of Institutions (BIMAT) Kolhapur, Maharashtra (ICRIEM-16)
23rd March 2016, www.conferenceworld.in ISBN: 978-81-932074-5-1

REAL TIME IMPLIMENTATION OF DAQ CARD

Amruta S.Shirke[1], Sharada B. Phunde[2], Prathamesh B.Bhosale[3]

[1,2,3]Arvind Gavali College of Engg, Satara(India)

ABSTRACT

This paper presents a PC based temperate monitoring and control system using virtual instrumentation, MATLAB. Data acquisition is an important role in Industry in order to insure quality of service. The Temperature sensor sense the temperature of bulb and produces a analog signal which is then gives to the AVR controller. Controller gives the digital signal as input to the relay Circuit. Hence, On/Off operation of bulb and fan done.

Keywords: AVR Controller, Data Acquisition Card, MATLAB Software

I. INTRODUCTION

This project is about monitoring and controlling the temperature of a small prototype plant using MATLAB Software. With the help of MATLAB Software we done programming as per our need. We create GUI window which shows the temperature of a bulb sensed by temperature sensor. This Paper gives an overview of Data Acquisition System and control Techniques.

II. DATA ACQUISITION SYSTEM

2.1 AVR Controller

The ATmega8 is a low power CMOS 8 bit Microcontroller based on AVR RISC Architecture. The ATmega8 provides the following Features- 8 K bytes of In-System Programmable Flash with Read–Write capabilities, 512 bytes of EEPROM, 1K byte of SRAM, 23 general purposes. I/O lines, 32 general purpose working registrar.

The device is manufactured using Atmel's high density non-volatile memory technology. The Flash programmed memory can be reprogrammed in system through an SPI serial interface, by a conventional non volatile memory programmer.

ATmega8 is powerful microcontroller that provides a highly-flexible and cost-effective solution to many embedded control applications. The ATmega8 AVR is supported with a full suite of program and system development tools, including C compilers, micro assemblers, program debugger/simulators, in-Circuit Emulators.

2.2 Control System-Acquired data is sample, processed and then controlled as per the instruction. In control system the computer compares the signal coming from the sensor or DAQ device with the reference value which is nothing but set point. According to the set point the controller makes a decision and sends a control signal to hardware equipment.

III. HARDWARE IMPLEMENTATION

This part explains more information about the hardware designs. There are temperature sensor, AVR controller, MAX 232, Fan, Bulb, DB9 port and Relay unit.DAQ card and Relay unit having a different power supply.

3.1. Temperature Sensor

LM 35 is the temperature sensor from National Semiconductor. This sensor output voltage is linearly proportional to the Celsius. Temperature ranges between -55° C to 150° C and the accuracy is about +2.0^o C and output scale is 10mV/C.

3.2. Max 232

The MAX 232 is a dual driver/receiver that includes a capacitive voltage generator to supply TIA/EIA-232-F voltage levels from a single 5-V supply .Each receiver converts TIA/EIA-232-F inputs to 5-V TTL/CMOS levels. These receivers have a typical threshold of 1.3 V, a typical hysteresis of 0.5 v, and can accept +30-V inputs. Each driver converts TTL/CMOS input levels into TIA/EIA-232-F levels. The driver, receiver and voltage-generator functions are available as cells in the Texas Instruments Lin ASIC library.

3.3. Relay

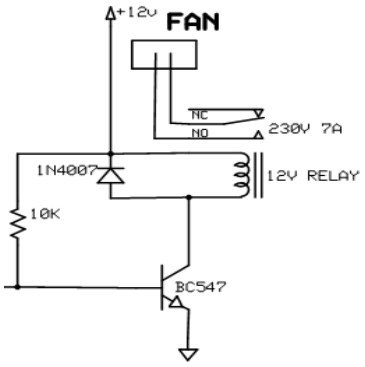

Fig no 1: Relay Circuit

Relay are electromechanical device that use an electromagnet to operate a pair of movable contacts farm an open position to a closed position. Advantages of relay is that takes relatively small amount of power to operate the relay coil but relay itself can used to control motor, lamp heater .When base voltage of transistor is zero or negative, then transistor is in cut-off and acts as open circuit. In this condition no current flow and relay coil is de-energized so relay is always NC.

When transistor switch off current in relay is decreases and magnetic field collapse. However, due to store energy in magnetic field reverse voltage is developed across the coil as it tries to maintain current in the relay coil. This action produces high voltage spike across the relay coil that can damage switching NPN transistor. So, in order to prevent this freewheeling diode is used.

IV. BLOCK DIAGRAM

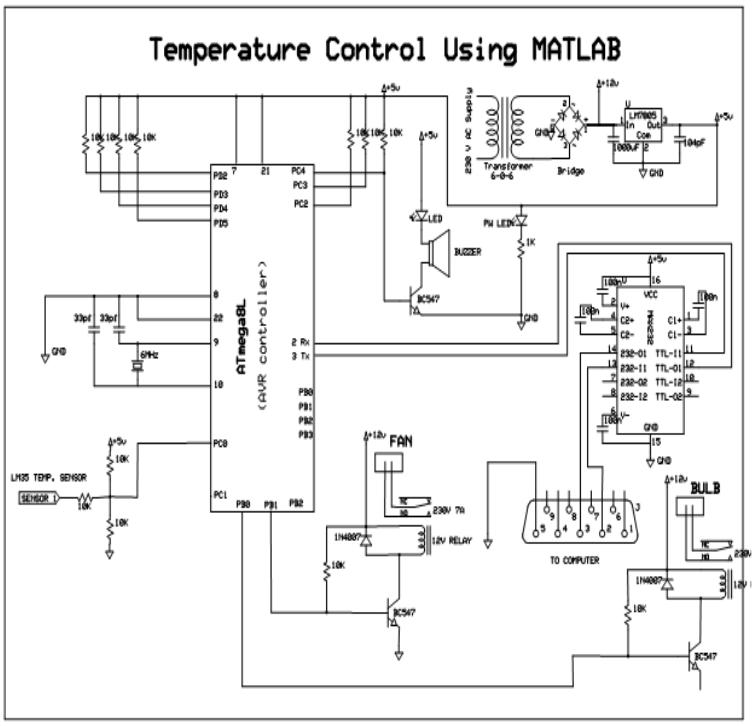

Fig no 2: Layout Diagram

4.1 Gui Window

Graphical user interface window create in MATLAB. In GUI window we can set the set point for the temperature and also see the current temperature on GUI window. We also manually operate fan and bulb.

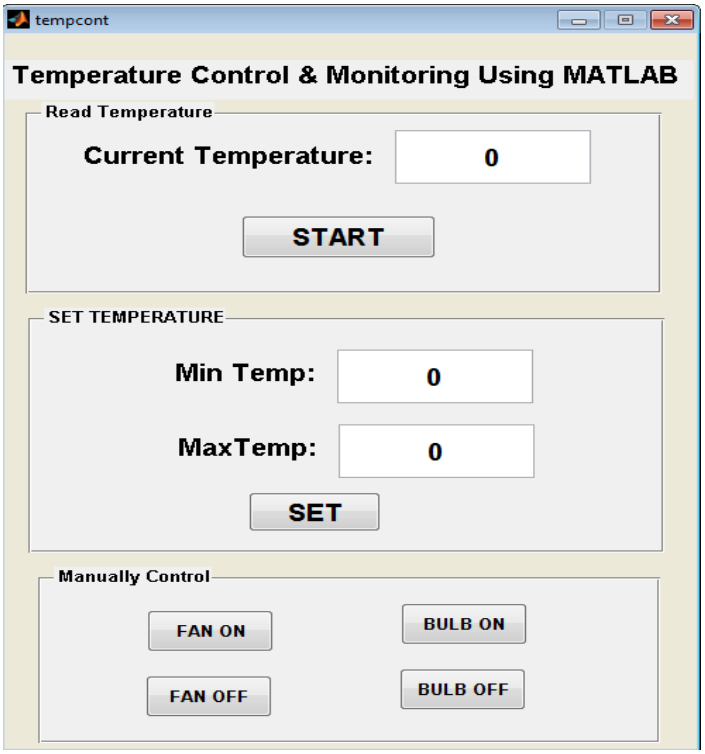

V. CONCLUSION

Development of technology in industrial field it is necessary to design a system with more sensitivity, reliable, and low cost system. Above proposed data acquisition systems fulfill all requirement, mentioned above. Various application areas include- industrial monitoring, nuclear power plant monitoring. In these application areas, a little variation in temperature can cause serious accidents. So temperature needs to be controlled timely. Other application areas can be greenhouse monitoring, defense and biomedical applications.

VI. ACKNOWLEDGEMENT

It is indeed a matter of great pleasure & proud to be able to present this project on "**TEMPERATURE CONTROL & MONITORING USING MATLAB "**

We are highly indebted the **PROJECT GUIDE PROF. MR. BHOSALE P. B.** for his invaluable guidance & appreciation for giving form & substances to this report. It is due to his enduring efforts; patience & enthusiasm, which has given a sense of direction & purposefulness to this project & ultimately made it a success.

REFERANCES

Journal Papers-

[1] S.Rajesh Kumar, S.Ramesh Kumar "Industrial temperature monitoring and control system through Ethernet " 'International journal of engineering and science', June,2013

[2] Neeraj A. Kulkarni, S.O. Dahad," Intelligent Portable Data Acquisition System with Predictive Features", 'International journal of engineering and science' May 2015

[3] Ankita Gupta1, Sharmelee Thangjam2," AVR Based Temperature Monitoring and Controlling Using ZigBee in Matlab", 'International journal of engineering and science' May 2012.