Finger Print Based Attendance System SMS to Parents

Swapnita Hargude[1], Pooja MaliGuide[2],S.N.Yadav [.H.O.D of E & TC][3]

[1,2,3]Department of E& TC, Dhananjay Mahadik Group Of Institution,Vikaswadi,Kagal

ABSTRACT

The main objective of this project is to record the attendance of students using Finger print system. Every student's finger print is taken over the sensor to record their attendance.

In classrooms, time is wasted in roll calls as it is done manually. In this proposed system, authorized student should give his/her thumb. This finger print sensor contains an integrated in built circuit that is used for storing, processing information through arduino. Thus, the data stored as the identification/attendance of the person. Once the student gives thumb, it reads the data and verifies it with the data stored in the Arduino controller. If the data matches, then it displays a message on the LCD confirming the entry of that student else displays a message denying the attendance. The status of a student's attendance can be retrieved from this system by pressing the status button interfaced to the Arduino controller. Hence, a lot of time is saved as all the students attendance is directly stored in the data base and same time information send to parents for that sim900 module is used.

***Keywords:* -Biometric, Fingerprint, Attendance, Optical sensor, Arduino.**

I.INTRODUCTION

The most common means of tracking student attendance in the classroom is by enforcing the students to manually sign the attendance sheet, which is normally passed around the classroom while the lecturer is conducting the lecture. There are numerous disadvantages of using such system. The attendance sheet is passed around the class; some students may accidentally or purposely sign another student's name .Another issue of having the attendance record in a hardcopy form is that a lecturer may lose the attendance sheet. As a GSM is the Global System for Mobile Communications. It is called 2G or Second Generation technology. It is developed to make use of same subscriber units or mobile phone terminals throughout the world. A unique feature of GSM, not found in older analog systems, is the Short Message Service (SMS). SMS is a bidirectional service for short alpha numeric (up to 160 bytes) messages. Messages are transported in a store-and-forward fashion. For point-to-point SMS, a message can be sent to another subscriber to the service, and an acknowledgement of receipt is provided tothe sender in this system students report their attendance via biometric system and parents can receive SMS notification of attendance. The fingerprint has a lot of advantages, such as unique, permanent, good anti-fake and easy to use. So it is recognized increasingly by people. Figure show below the biometric system

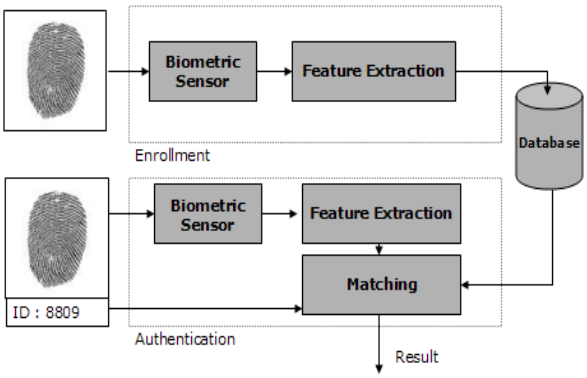

Figure1. Fingerprint-based attendance management

II. SYSTEM ARCHITECTURE

The proposed system is the combination of the software and hardware. The system is biometric system. The system is one of the most popular biometric system .the system is the finger print attendance system. This system whole structure has the no of blocks containing which have specific working function

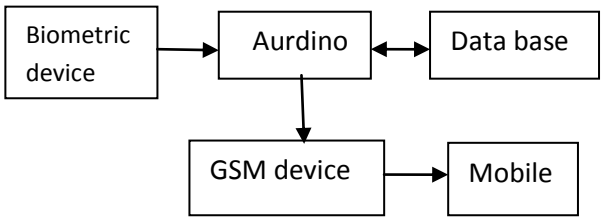

Fig 2:-system architecture

Biometric device: - Biometric identification system is unique system. Which is Scan the body part of human body it is identity access management and access control. So use of biometric system is a secure approach in this system we used the fingerprint reorganization system

Aurdino: - the system includes the aurdino software which acts as a microcontroller. Whole programming of this system is done in the Aurdino. It is the peace of the software is also called a IDE (Integrated development Environments) it does not need separate piece of hardware in order to load new code on board. it uses simplified version of c++making it easier to learn it uses Harvard architecture where programmer code and have data separate memory, here we used Atmega328 has 32 KB of flash memory forstoring code, 2KB o SRAM and 1 KB EPROM and operates with clock speed 16MHZ

GSM module:- the GSM module is used also for communication purpose which is used to send the message to parents .the Gsm module works on three frequencies 900 MHZ,1800MHZ,1900MHZ & requires +12v supply

III. FINGER PRINT SCANNING SYSTEM

The most commonly found type of fingerprint scanner used today is the capacitive scanner. You'll find this type of scanner inside various flagships, including the Galaxy S8, HTC U11, LG G6, and others. Again the name gives away the core component, providing you're familiar with a little electronics, the capacitor. Instead of creating a traditional image of a fingerprint, capacitive fingerprint scanners use arrays tiny capacitor circuits to collect data about a fingerprint. As capacitors can store electrical charge, connecting them up to conductive plates on the surface of the scanner allows them to be used to track the details of a fingerprint.

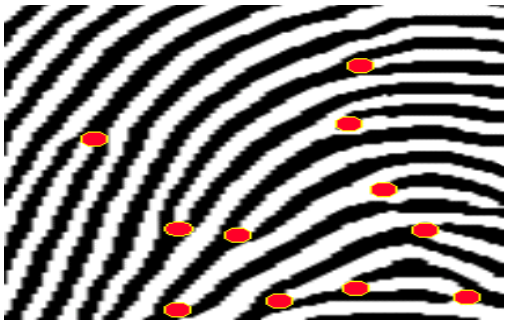

Fig. minutiae after marking

The charge stored in the capacitor will be changed slightly when a finger's ridge is placed over the conductive plates, while an air gap will leave the charge at the capacitor relatively unchanged. An op-amp integrator circuit is used to track these changes, which can then be recorded by an analogue-to-digital converter

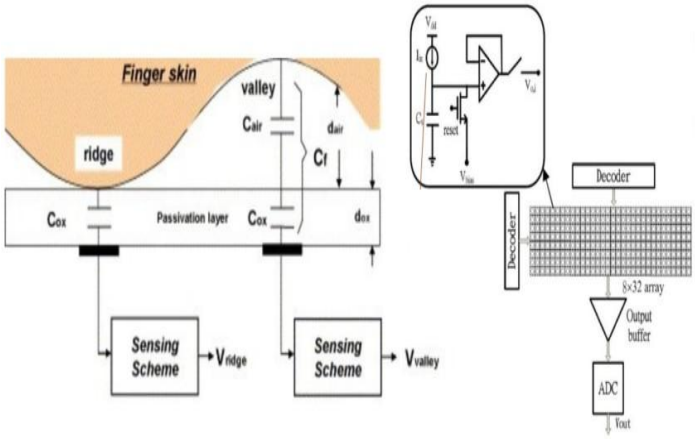

IV. ANALYSIS OF DATA

Given a fingerprint matcher, one would like to assess its accuracy and speed performance in a realistic setting. Unlike passwords and cryptographic keys, biometric templates have high uncertainty. There is considerable variation between biometric samples of the same user taken at different instances of time. Therefore the match is always done probabilistically. This is in contrast to exact match required by password and token based

approaches. The inexact matching leads to two forms of errors namely: False (impostor) Acceptance Rate (FAR) and the False (genuine individual) Rejection Rate (FRR). The FAR/FRR ratios depend, among other factors, on the type of difficulty of the algorithms used in thefingerprint extraction. Usually, algorithms with high-medium complexity lead to acceptable low FRR/FAR

False Accept: An impostor may sometime be accepted as a genuine user, if the similarity with his template falls within the intra-user variation of the genuine user. The FAR normally states, either in a percentage or a fraction, the probability of someone else matching as you. FAR is defined by the formula: (6) Where FA is the number of false accepts and N is the total number of verification.

FAR=FA/N*100

False Reject: When the acquired biometric signal is of poor quality, even a genuine user may be rejected during authentication. This form of error is labeled as a 'false reject'. If you fail to match against your own template, then you have been falsely rejected. The probability of this happening is referred to as the false rejection rate, or FRR. Thus, the higher the probability of false rejection, the greater the likelihood you will be rejected. FRR is defined by the formula:

FRR= FR/N*100

Where FR is the number of false reject and N is the total number of verification. The system may also have other less frequent form of error such as:

• **Failure to enroll (FTE)** it is estimated that nearly 4% of the population have illegible fingerprints. This consists of senior population, laborers who use their hands a lot and injured individuals. Due to the poor ridge structure present in such individuals, such users cannot be enrolled into the database and therefore cannot be subsequently authenticated. The FTE normally states, either in a percentage or a fraction, the possibility of someone failing to enroll in a system. Where FE is the total number of Failure Enroll and N is the total number of verification

FRR=FR/N*100

Failure to enroll (FTE) it is estimated that nearly 4% of the population have illegible fingerprints. This consists of senior population, laborers who use their hands a lot and injured individuals. Due to the poor ridge structure present in such individuals, such users cannot be enrolled into the database and therefore cannot be subsequently authenticated. The FTE normally states, either in a percentage or a fraction, the possibility of someone failing to enroll in a system

FTE=FE/N*100.

Where FE is the total number of Failure Enroll and N is the total number of verification.

The reason for this is to allow alternate finger should any of the fingers fails to enroll due to the poor ridge structure present in such fingers. The reason for interest in the use of students and staff of the above mentioned department and school respectively is easy accessibility and their readiness to provide their biometric data for research purposes.

The minutiae data were extracted from the fingerprint images and stored in a database as a template for the subject along with the user's ID. During authentication, the biometric of the user is captured again and minutiae data are also extracted forming the test template which is matched against the already stored template in the database. In each case, if the matching score is less than the threshold, the person is rejected otherwise the person is accepted. Using equation 6-8, Table 1 gives the respective values for the false Acceptance rate (FAR) and False Rejection Rate (FRR) and for the test that was carried out. In the test, the false acceptance rate was zero meaning that there were no cases of false acceptance (FAR) i.e. a person that was not pre-registered was not falsely enrolled for attendance. There were a few false rejections (FRR) during the test in which the system failed to identify some pre-registered users. These could be attributed to improper placement of the finger on the scanner and fingers that have been slightly scarred due to injuries.

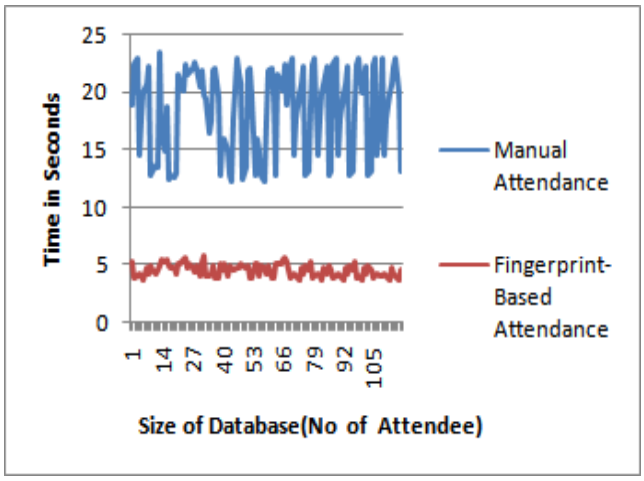

Fig: Analysis of data graph

V. CONCLUSION

Biometric technology is a reliable tool for authentication. Various fingerprint based attendance systems have been reviewed .Some of the systems look promising to be practically implemented in developing countries. The existing systems can further be improved or combined which helps in making the system more users friendly, secure and fast

The developed system is very helpful in saving valuable time of students and lecturers, paper and generating report at required time. The system can record the clock in and clock out time of students and workers in a very convenient manner using their fingerprint to prevent impersonation and reduce level of absence. Also, it reduces most of the administrative jobs and minimizes human errors, avoids proxy punching, eliminates

Time-related disputes and helps to update and maintain attendance records

REFERENCES

[1.] Mohamed Basheer K P, Raghu C V,"Fingerprint AttendanceSystem for classroom needs", NIT Calicut, Kerala, 2012.

[2.] Murizah Kassim, Hasbullah Mazlan, NorlizaZaini,Muhammad KhidhirSalle "Web-Based Student Attendance System usingRFIDTechnology"EEEInternational Conference,2012

[3.] K.Jaikumar, M.SanthoshKumar, S.Rajkumar, A.Sakthivel4Asst. Professor-ECE, P. A. College of Engineering and Technology International Journal of Research in Engineering and Technology

[4.] B. Rasagna, Prof. C. Rajendra "SSCM: A Smart Systemfor College Maintenance" International Journal of Advanced Research in Computer Engineering & Technology, May 2012

[5.] BarbadekarAshwini, "Performance Analysis of Fingerprint Sensors", Vishwakarma Institute of Technology, Pune, 2010Mohamed Basheer K P, Raghu C V, "Fingerprint AttendanceSystem for classroom needs", NIT Calicut, Kerala, 2012.