15th International Conference on Recent Trends in Engineering, Applied Science and Management
Gurukul Institute of Engineering & Technology, Rajasthan, India. ICRTEASM-18
1st April 2018 www.conferenceworld.in ISBN: 978-93-87793-18-7

# POWER FACTOR IMPROVEMENT BY AUTOMATICALLY ENGAGING APPROPRIATE NUMBER OF SHUNT CAPACITOR FOR INDUCTIVE LOAD

**Deepesh Namdev[1],Sandeep Arora[2], Kritika Sharma[3], Sarita Mehta[4], Foranta Meena[5], Madhu Bagherwal[6]**

*(HOD cum Associative Professor Department of Electrical Engineering GIET Kota[1])*
*(Department of Electrical Engineering Professor GIET Kota)*
*(Department of Electrical Engineering 4th Year GIET Kota[3, 4, 5, 6])*

**ABSTRACT**

To minimize penalty for industrial units by using automatic power factor correction unit. Power factor is defined as the ratio of real power to apparent power. This definition is often mathematically represented as KW/KVA, where the numerator is the active (real) power and the denominator is the (active + reactive) or apparent power. Reactive power is the non-working power generated by the magnetic and inductive loads, to generate magnetic flux. The increase in reactive power increases the apparent power, so the power factor also decreases. Having low power factor, the industry needs more energy to meet its demand, so the efficiency decreases.

In this proposed system the time lag between the zero voltage pulse and zero current pulse duly generated by suitable operational amplifier circuits in comparator mode are fed to two interrupt pins of the microcontroller. It displays the time lag between the current and voltage on an LCD. The program takes over to actuate appropriate number of relays from its output to bring shunt capacitors into the load circuit to get the power factor till it reaches near unity. The microcontroller used in the project belongs to 8051 family.

Further the project can be enhanced by using thyristor control switches instead of relay control to avoid contact pitting often encountered by switching of capacitors due to high in rush current.

***Keywords :Reactive power, Power factor, Power factor correction, Shunt capacitor, Microcontroller 8051, Power Supply, Transformer, Crystal Oscillator, LCD, Capacitor Bank, Relay and Relay Driver. VFD operation, Harmonics, Harmonics mitigation***

## I.INTRODUCTION

In electrical engineering, the power factor of an AC electrical power system is defined as the ratio of real power flowing to the load to the apparent power in the circuit, and is a dimensionless number in the closed interval of -1 to 1. A power factor of less than one means that the voltage and current waveforms are not in phase, reducing the instantaneous product of the two waveforms (VxI). Real power is the capacity of the circuit for performing work in a particular time. Apparent power is the product of current and voltage of the circuit. Due to energy stored in the load and returned to the source, or due to a non-linear load that distorts the wave shape of the current drawn from the source, the apparent power will be greater than the real power. A negative power factor occur when the device (which is normally the load) generates power, which then flows back towards thesource, which is normally considered the generator.

In an electric power system, a load with a low power factor draws more current than a load with a high power factor for the same amount of useful power transferred. The higher currents increase the energy lost in the distribution system, and require larger wires and other equipment. Because of the costs of larger equipment and wasted energy, electrical utilities will usually charge a higher cost to industrial or commercial customers where there is a low power factor.

Linear loads with low power factor (such as induction motors) can be corrected with a passive network of capacitors or inductors. Non-linear loads, such as rectifiers, distort the current drawn from the system. In such cases, active or passive power factor correction may be used to counteract the distortion and raise the power factor. The devices for correction of the power factor may be at a central substation, spread out over a distribution system, or built into power consuming equipment. [11]

## II.LINEAR CIRCUIT

In a purely resistive AC circuit, voltage and current waveforms are in step (or in phase), changing polarity at the same instant in each cycle. All the power entering the load is consumed (or dissipated).

Where reactive loads are present, such as with capacitors or inductors, energy storage in the loads results in a phase difference between the current and voltage waveforms. During each cycle of the AC voltage, extra energy, in addition to any energy consumed in the load, is temporarily stored in the load in electric or magnetic fields, and then returned to the power grid a fraction of the period later. Because high voltage alternating current distribution systems are essentially quasi-linear circuit systems subject to continuous daily variation, there is a continuous "ebb and flow" of non-productive power. Non-productive power increases the current in the line, potentially to the point of failure.

Thus, a circuit with a low power factor will use higher currents to transfer a given quantity of real power than a circuit with a high power factor. A linear load does not change the shape of the waveform of the current, but

may change the relative timing (phase) between voltage and current. Electrical circuits containing dominantly resistive loads (incandescent lamps, heating elements) have a power factor of almost 1.0, but circuits containing inductive or capacitive loads (electric motors, solenoid valves, transformers, fluorescent lamp ballasts, and others) can have a power factor well below 1. [11]

## III.DEFINATION AND CALCULATION

ELECTRICAL POWER=VOLTAGE ACROSS THE ELEMENT×CURRENT THROUGH THE ELEMENT :

A fraction of this total electrical power which actually does our useful work is called as active power. It is denoted as 'P'. P = Active power = Total electrical power. Cos $\phi$ and its unit is watt. The other fraction of power is called reactive power. This does no useful work, but it is required for the active work to be done. It is denoted by 'Q' and mathematically is given by, Q = Reactive power = Total electrical power. Sin $\phi$ and its unit is VAR (Volt Amp Reactive). This reactive power oscillates between source and load. To help understand this better all these power are represented in the form of triangle.

Fig. 1.1 Power Triangle [5]

Mathematically,

S2 = P2 + Q2

P = V I Cosϕ

And Power Factor = Active power /Apparent power

(Cos $\phi$ = Active power/Apparent power)

## IV.METHODS OF POWER FACTOR CORRECTON

**1. Static Capacitor-**

We know that most of the industries and power system loads are inductive that take lagging current which decrease the system power factor. For Power factor improvement purpose, Static capacitors are connected in parallel with those devices which work on low power factor.

These static capacitors provides leading current which neutralize (totally or approximately) the lagging inductive component of load current (i.e. leading component neutralize or eliminate the lagging component of load current) thus power factor of the load circuit is improved.

These capacitors are installed in Vicinity of large inductive load e.g. Induction motors and transformers etc, and improve the load circuit power factor to improve the system or devises efficiency.

**2. Synchronous Condenser-**

When a Synchronous motor operates at No-Load and over exited then it’s called a synchronous Condenser. Whenever a Synchronous motor is over-exited then it provides leading current and works like a capacitor

When a synchronous condenser is connected across supply voltage (in parallel) then it draws leading current and partially eliminates the re-active component and this way, power factor is improved. Generally, synchronous condenser is used to improve the power factor in large industries.

**3. Phase Advancer-**

Phase advancer is a simple AC exciter which is connected on the main shaft of the motor and operates with the motor’s rotor circuit for power factor improvement. Phase advancer is used to improve the power factor of induction motor in industries.

As the stator windings of induction motor takes lagging current 90° out of phase with Voltage, therefore the power factor of induction motor is low. If the exciting ampere-turns are excited by external AC source, then there would be no effect of exciting current on stator windings. Therefore the power factor of induction motor will be improved. This process is done by Phase advancer.

SHUNT CAPACITOR FOR INDUCTIVE LOADS :

The most practical and economical power factor improvement device is the capacitor. As all inductive loads produce inductive reactive power (lagging by the phase angle of 90°). Capacitors on the other hand produce capacitive reactive power, which is the exact opposite of inductive reactive power. In this instance, the current

peak occur before the voltage peak, leading by a phase angle of 90°. By careful section of capacitance required, it is the possible totally cancel out the inductive reactive power when placed in circuit together. [11]

**BLOCK DIAGRAM**

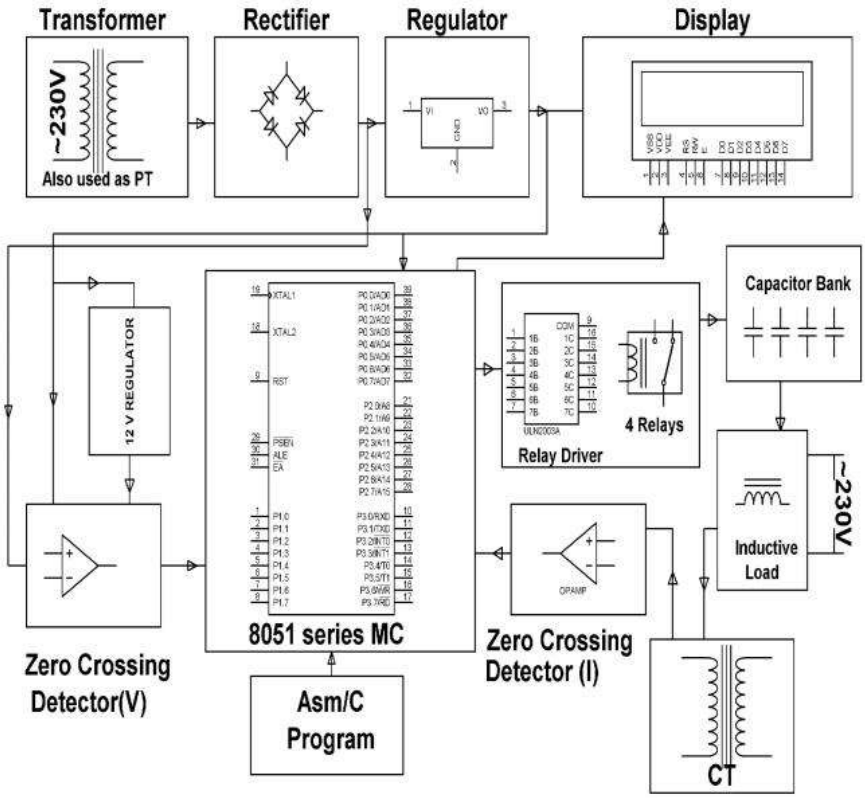


Fig 1.1 Block Diagram of Power Factor Improvement

**1.1 Explanation:**

Automatic Power Factor correction device is developed basing on a micro controller 8051. The voltage and current sampled is converted in to square wave using a zero cross detector. The V and I sample signals are feed to the micro controller at INT0 and INT1 and the difference between the arrival of wave forms indicate the phase angle difference. The difference is measured with high accuracy by using internal timer. This time value is calibrated as phase angle and corresponding power factor. The values are displayed in the 2x16 LCD modules after converting suitably. The capacitor banks are switched as per the calibration in steps.

**1.2 Aims of APFC Panel**

Our project is a small model of the automatic power factor improvement device, for industrial load we can also develop the large capacity power factor improvement device. By improving the power factor the industrial

consumers get the concessions in the energy meter bill. Also the improvement of power factor helps to decrease the load on the alternator at the generation station. It is a cheaper and static method of improving power factor. To reduce the losses in the power system the power factor must be high i.e. at near to unity. This can be achieve by installing the APFC panel in transmission line and where the inductive loads are in large amount.

SYSTEM DEVELOPMENT

**2.1 Microcontroller 8051 and Features Of 8051**

Fig.2.1 MICROCONTROLLER 8051

## FEATURES OF MC 8051

• 8bit accumulator, 8bit Register and 8bit ALU.

• On chip RAM 128 bites (data memory).

• On chip ROM 4 Kbytes (program memory).

• Two 16bit counter/ timer.

• A 16 bit DPTR (data pointer)

• Two levels of interrupt priority.

• 4 byte bi-directional input/ output port.

• Power saving mode (on some derivatives).

• 16bit address bus:-it can access 2^16 memory locations:- 64kb (65536) each of RAM and ROM.

• It is an inclusion of Boolean processing system, have an ability to allow logic operations to be carried out on registers and RAM.

• 8bit data bus:-it can access 8bit of data in one operation. It also consist of 3 internal and two external interrupts

• UART (this serial communication port makes chip to use simply as a serial communication interface)

• It has four separate Register set. (Each contains 8 Registers (R0 to R7))

### 2.1.1 INTERNAL STRUCTURE OF 8051

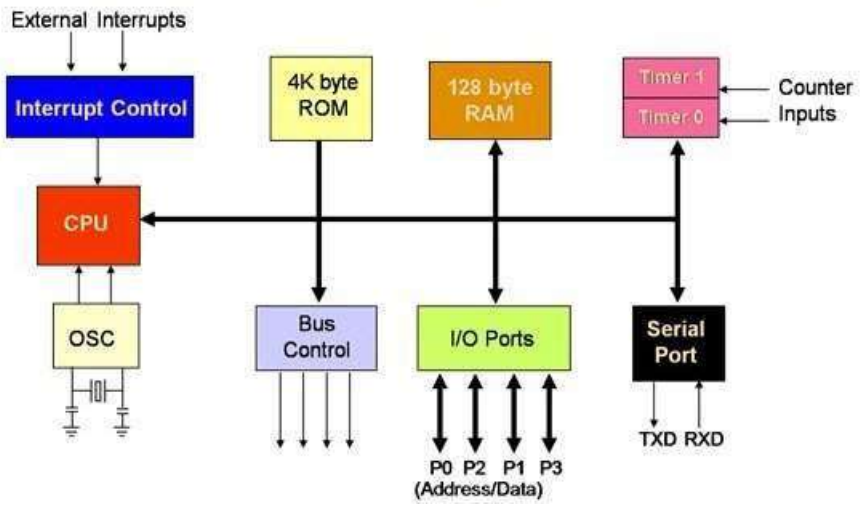


Fig 2.2: Block Diagram of Internal structure Of 8051 Microcontroller [7]

• **CPU (Central Processor Unit):**

As you may be familiar that Central Processor Unit or CPU is the mind of any processing machine. It scrutinizes and manages all processes that are carried out in the Microcontroller. User has no power over the functioning of CPU. It interprets program printed in storage space (ROM) and carries out all of them and do the projected duty. CPU manages different types of registers in 8051 microcontroller.

• **Interrupts:**

As the heading put forward, Interrupt is a subroutine call that reads the Microcontroller' s key function or job and helps it to perform some other program which is extra important at that point of time. The characteristic of 8051 Interrupt is extremely constructive as it aids in emergency cases. Interrupts provides us a method to postpone or delay the current process, carry out a subroutine task and then all over again restart standard program implementation.

The Micro-controller 8051 can be assembled in such a manner that it momentarily stops or break the core program at the happening of interrupt. When sub-routine task is finished then the implementation of core program initiates automatically as usual. There are 5 interrupt supplies in 8051 Microcontroller, two out of five are peripheral interrupts, two are timer interrupts and one is serial port interrupt.

• **Memory:**

Micro-controller needs a program which is a set of commands. This program enlightens Microcontroller to perform precise tasks. These programs need a storage space on which they can be accumulated and interpret by Microcontroller to act upon any specific process. The memory which is brought into play to accumulate the program of Microcontroller is recognized as Program memory or code memory. In common language it' s also known as Read Only Memory or ROM.

Microcontroller also needs a memory to amass data or operands for the short term. The storage space which is employed to momentarily data storage for functioning is acknowledged as Data Memory and we employ Random Access Memory or RAM for this principle reason. Microcontroller 8051 contains code memory or program memory 4K so that is has 4KB Rom and it also comprise ofdata memory (RAM) of 128 bytes.

- **Bus:**

Fundamentally Bus is a group of wires which functions as a communication canal or mean for the transfer Data. These buses comprise of 8, 16 or more cables. As a result, a bus can bear 8 bits, 16 bits all together. There are two types of buses:

**Address Bus:** Microcontroller 8051 consists of 16 bit address bus. It is brought into play to address memory positions. It is also utilized to transmit the address from Central Processing Unit to Memory.

**Data Bus:** Microcontroller 8051 comprise of 8 bits data bus. It is employed to cart data.

**2.2 PIN DIAGRAM OF MC 8051**

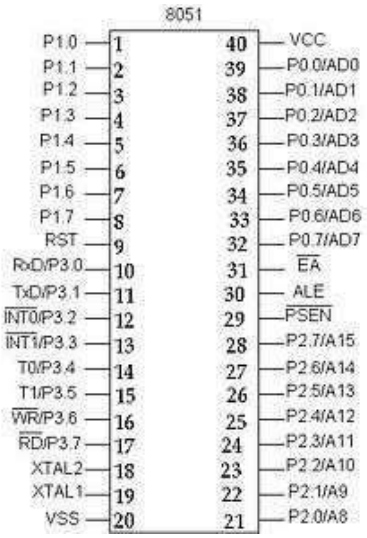


Fig 2.3: Pin Diagram of MC 8051[4]

**2.3 POWER SUPPLY**

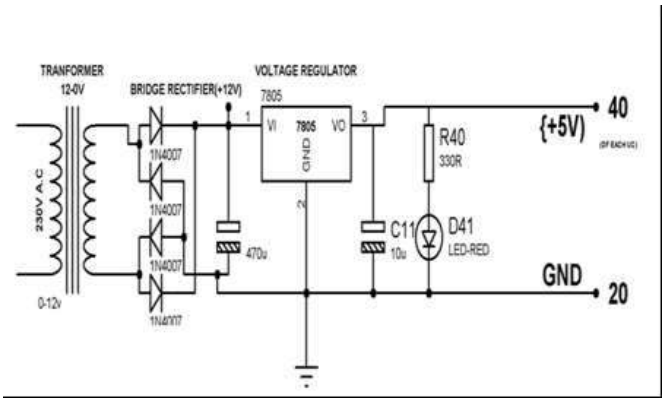


Fig 2.4: Circuit Diagram of Power Supply [8]

**Explanation**

In this power supply we are using step-down transformer, IC regulators, Diodes, Capacitors and resistors. Explanation: - The input supply i.e., 230V AC is given to the primary of the transformer (Transformer is an electromechanical static device which transform one coil to the another without changing its frequency) due to the magnetic effect of the coil the flux is induced in the primary is transfer to the secondary coil. The output of the secondary coil is given to the diodes. Here the diodes are connected in bridge type. Diodes are used for rectification purposes. The output of the bridge circuit is not pure dc, somewhat rippled ac is also present. For that capacitor is connected at the output of the diodes to remove the unwanted ac, capacitor are also used for filtering purpose. The both (-ve) terminal of the diode (D2 & D3) is connected to the (+ve) terminal of the capacitor and thus the input of the IC Regulator (7805 & 7812). Here we are using Voltage regulators to get the fixed voltage to our requirements." Voltage regulator is a CKT that supplies a constant voltage regardless of changes in load currents. These IC' s are designed as fixed voltage regulators and with adequate heat sinking can deliver o/p currents in excess of 1A. The o/p of the IC regulator is given to the LED through resistors, When the o/p of the IC i.e, the voltage is given to the LED, it makes its forward bias and thus LED gloves on state and thus the +ve voltage is obtained. Similarly, for -ve voltage, here the both +ve terminals of the diodes (D1 & D4) is connected to the -ve terminals of the capacitors and thus to the I/p of the IC regulator with respect to ground. The o/p of the IC regulator(7912) which is a -ve voltage is given to the terminal of LED, through resistor, which makes it forward bias, LED conducts and thus LED gloves in ON state and thus the -ve voltage is obtained. The mathematical relation for ac input and dc output is -

Vdc = Vm/3.141 (before capacitor)

Vd = Vm (after capacitor) [6]

**2.4 TRANSFORMER**

**1. Main Transformer :**

Fig. 2.5 Main Transformer [10]

The main transformer of 230V to 12V step down is used. At the starting of the setup it is installed for step down the single phase supply voltage 230 volts to 12 volts. The output of this transformer is given to the diodes, which are connected in bridge style for the rectification purpose. Also from the transformer primary side the supply is given to the choke which is used as inductive load and an incandescent lamp which is act as a resistive load in the system.

**2. Current Transformer:**

Fig. 2.6 Current Transformer

Current transformer reduce the magnitude of the current The current transformer is connected between the load (inductive) which draws the lagging current and the zero crossing detector which output is given to the microcontroller.

**2.5 Crystal Oscillator**

• The 8051 uses the crystal for precisely that to synchronize its operation. Effectively, the 8051 operates using what are called "**machine cycles**."

• A single machine cycle is the minimum amount of time in which a single 8051 instruction can be executed. Although many instructions take multiple cycles.

• 8051 has an on-chip oscillator. It needs an external crystal that decides the operating frequency of the 8051.

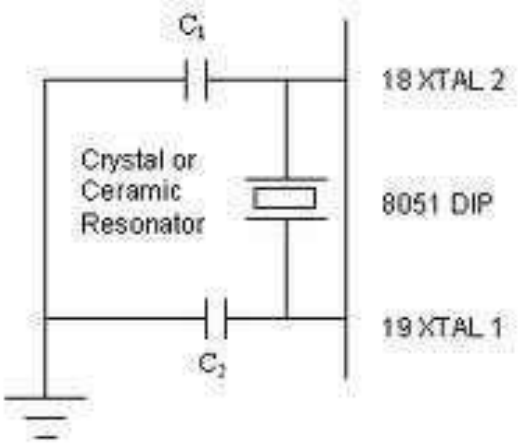


Fig: 2.7 Crystal Oscillator Circuit [9]

**2.6 Capacitor Bank**

Fig. 2.8: Capacitor Bank [10]

The capacitors are used in the project for the improvement of the power factor which is decreases due to lagging current drawn by the circuit. In this system four capacitors are used each of4.70μF.

**2.7 LCD**

LCD panel consists of two patterned glass panels in which crystal is filled under vacuum. The thickness of glass varies according to end use. Most of the LCD modules have glass thickness in the range of 0.70 to 1.1mm.

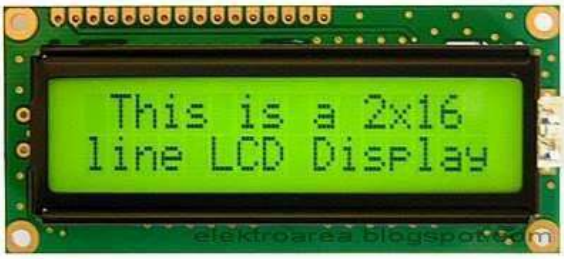


Fig. 2.9: Liquid Crystal Display

The values are displayed in the 2x16 LCD modules after converting suitably. The liquid crystal display (LCD), as the name suggests is a technology based on the use of liquid crystal. It is a transparent material but after applying voltage it becomes opaque. This property is the fundamental operating principle of LCDs.

**2.8 INTERFACING OF LCD WITH 8051 MC**

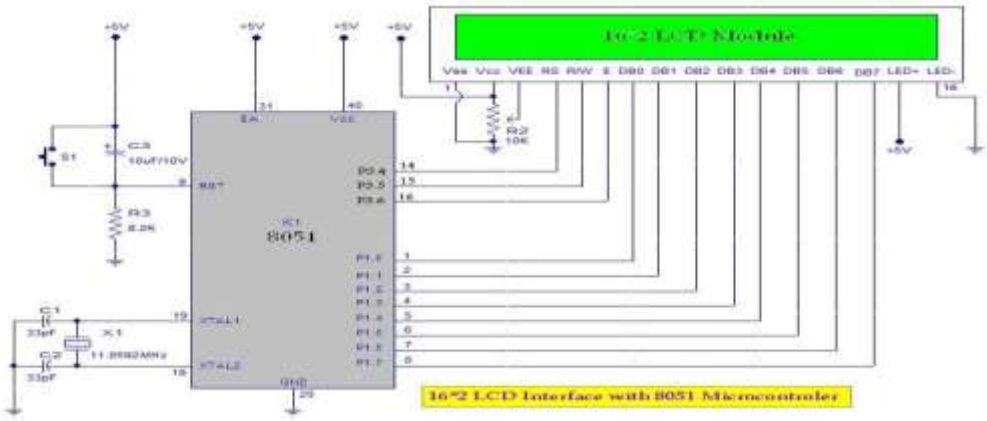


Fig 2.10: Interfacing Of LCD with MC 8051

The potential transformer measure the voltage level and gives it to the diode and Zener diode with current limiting resistors .the signal is converted to a square wave. The current transformer measure the current level. Since the current level is very low it is amplified to a bigger value with the help of an operational amplifier. The same signal is given to the diode and Zener diode arrangement; it is converted to a square wave. Both the square wave signals are fed to the micro controller as input, the phase difference is taken between the square waves and the cosine of the value is taken, which gives the power factor. The switching devices are transistors for the capacitor banks. During peak hours if the power factor becomes low, the microcontroller sends a high signal to the base of the transistor, the transistor acts as a closed switch, automatically the capacitor banks get connected which improves the power factor. The LCD is used to display the power factor that is the old value and new value. [2]

**Initialization of the LCD**

- Give the Supply and Wait for a Second to Stabilize the Display.
- Give the Instruction 38h for Initialize 2 Line display of 5*7 Matrix LCD.
- Wait for a few millisecond (approx. 5ms) to Complete Operation and LCD take Action as per given Command.
- Give 0fh Command to Display ON & Cursor ON and Blinking.
- Wait for some time (approx. 5ms).
- Wait for some time (approx. 5ms).
- Give command 06h for making Increment Cursor mode of LCD. By this, cursor should increase after every Character is written to display automatically. Wait for some time (approx 5ms).
- Give the command 80h for Cursor take position at 1st Line 1st Character.

**2.8 Zero Crossing Detector**

The zero crossing detector is a sine-wave to square-wave converter. The reference voltage in this case is set to zero. The output voltage waveform shows when and in what direction an input signal crosses zero volt. If input voltage is a low frequency signal, then output voltage will be less quick to switch from one saturation point to another. And if there is noise in between the two input nodes, the output may fluctuate between positive and negative saturation voltage $V_{sat}$. [6]

**2.9 Component List**

| S.NO. | COMPONENTS |
|---|---|
| 1. | PCB ,Transformer |
| 2. | P-N junction Diodes |
| 3. | 2.50Mf capacitors |
| 4. | Schottky barrier rectifier |
| 5. | Voltage Regulator |
| 6. | 470 µf capacitor |
| 7. | Total resistors |
| 8. | LEDs |
| 9. | Relays |
| 10. | Slide switches |
| 11. | ZCD (voltage & current) |

| | |
|---|---|
| 12 | 10 µf capacitors |
| 13. | Relay driver |
| 14. | Microcontroller 8051 |
| 15. | LCD |
| 16. | Incandescent Lamp |
| 17. | Choke |
| 18 | Lamp Holder |

**2.10 Relay and Relay Driver**

**Relay:-**

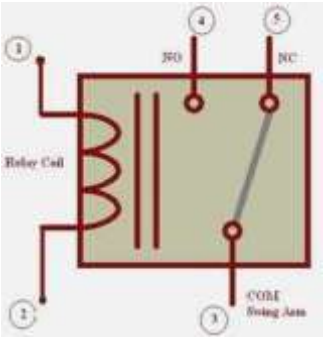


Fig. : 2.11: Construction of the Relay

Whenever required power is applied to the inductor coil, the current flowing through the coil generates a magnetic field which is helpful to move the swing terminal and attached it to the normally open (NO) contact. Again when power is OFF, the spring restores the swing terminal position to NC. Interfacing relay to 8051 microcontroller

There are many ways to interface a relay to 8051 microcontroller. But simple and easy way for beginners is by using ULN2003/ULN2803. In this tutorial, a 5volts operated relay is taken for the demonstration. But the circuits shown can be useful to 12Volts operated relays also.

## ALGORITHM OF THE PROJECT

**3.1(a) Altering phase of two signals**

Step-1:- Timer0 set and run till Timer1 is set or vice-versa.

Step-2:- Two signals (current & voltage) are introduced.

Step-3:- Phase angle between the two signals altered by incrementing or decrementing delay between two.

Step-4:- Delay of 0.1 ms is given while incrementing or decrementing.

Step-5:- Accumulator stores the number of incrementing or decrementing operations.

Step-6:- Delay is called according to the number stored in the accumulator.

Step-7:- The signals, altered in phase are sent to the motherboard for power factor detection. [6]

**(b) Phase angle Detection:**

Step-1:- Microcontroller started on interrupt mode.

Step-2:-INTX0 & INTX1 are enabled.

Step-3:-INTX0 given VOLTAGE (V), INTX1 given CURRENT (I) from sampling circuit.

Step-4:-Timer measures time interval between two interrupts.

Step-5:-Time interval calibrated.

Step-6:-Calibrated data is converted from HEX to BCD, then to ASCII for display on LCD. [6]

## PERFORMANCE ANALYSIS

### 4.1 Advantages OF Improved Power Factor

• Reactive power decreases

• Avoid poor voltage regulation

• Overloading is avoided

• Copper loss decreases

• Transmission loss decreases

• Improved voltage control

• Efficiency of supply system and apparatus [6]

### 4.2 Adverse Effect of Over Correction

• Power system becomes unstable

• Resonant frequency is below the line frequency

• Current and voltage increases [6]

**4.3 APPLICATIONS OF POWER FACTOR**

This project is a model of static power factor correction method. By increasing the capacity and the ratings of the components it can be used for the following purpose –

1. In industries

2. At substations

3. On the transmission line

4. For commercial purpose

## IMPLEMENTATION AND RESULT

**5.1 Conclusion**

It can be concluded that power factor correction techniques can be applied to the industries, power systems and also households to make them stable and due to that the system becomes stable and efficiency of the system as well as the apparatus increases. The use of microcontroller reduces the costs. Due to use of microcontroller multiple parameters can be controlled and the use of extra hard wares such as timer, RAM, ROM and input output ports reduces. Care should be taken for overcorrection otherwise the voltage and current becomes more due to which the power system or machine becomes unstable and the life of capacitor banks reduces.

**5.2 Future Improvement**

• In this project, we used the assembly language program to operating the microcontroller 8051 and all other related components. We can also use the Aurdino for this project to make the advanced. In future days in many applications Aurdino is used.

• Currently we use microcontroller 8051, the use of another MC can make the system advanced.

• By changing the program we can obtain the other advanced features or the LCD will be showing other parameters present in the system for different applications.

**5.3 Recommendation**

It is highly recommended that this system of high capacity should be installed at every industry, commercial buildings an also in a transmission system where the power factor is continuously poor.

**5.4 COMPLETE HARDWARE**


Fig. : 5.1: Project Image

## REFERENCES

1) D. Beeman, Industrial Power Systems Handbook, Mc Graw-Hill Inc, 1955

2) Gopal Reddy.K, Mohmed Sufiyan Khan, Asifulla khan, Mohamed Manan, "Intelligent Automatic Power Factor Correction", ISSN: 2394-3696, Vo;lume 2, Issue 5, May 2015

3) I. Lazar, Electric System Analysis and Design for Industrial plan, McGraw-Hill Book Inc, 1980

4) Mazidi Muhammad Ali, "The 8051 Microcontroller and Embedded Systems Using Assembly and C", Pearson Education, September 2007, Second edition

5) R. H. S. Soeprapto, A, A. F. A. Abd. Rahman,A, M. N. M. Nasir,A, Z. H. Bohari, "Analysing of a Shunt Compensator Installation", IJES, Volume 3, Issue 12, December 2014

6) Satyasuranjeet Behera, Sibasis Mohapatra, Monalisa Bisoi, "Automatic Power Factor Correction By Microcontroller 8051", Thesis, National Institute of Technology Rourkela, 2007

7) www.circuitstoday.com

8) www.electrical4u.com

9) www.elprocus.com

10) www.switchgearpanels.com

11) www.wikipedia.org