International Conference on Recent Innovations in Science, Agriculture, Engineering and Management
University College of Computer Applications Guru Kashi University, Bathinda, Punjab (India)
20th November 2017, www.conferenceworld.in ISBN: 978-93-86171-80-1

Lifi uses in Power House

Gurpreet Singh[1],Pargat Singh[2]

[12]Guru Kashi University,(India)

ABSTRACT

This paper(article) is hinge on wireless hi-tech. Wireless netting becomes a integral part in modern era. Individual can use(exploit) WIFI as well as LIFI.

LIFI represent for light fidelity. The technology was pioneered by German Physicist Harald Hass,in 2011. LIFI supply(hand over)transmission of data through LED light bulb that varies(alter,diverge)) in intensity faster than human eye can follow. LIFI is possible(feasible) in every sector where network is used. In this paper we will discuss(scrutinize,analyse) the use of LIFI technology in "Power House". LIFI is fast way to transmit the data. Power House is a field where this network is utmost(extremely,immensely) worthwhile(beneficial) to exchange records, mails etc. LIFI is affordable and fast-moving technology to share the data.

Keywords*: *LED, VLC, Bandwidth, WIFI

I. INTRODUCTION

Presently, wireless networking is used in whole world like home, cafes, hotels, airports etc. There is various wireless system available such that WIFI , LIFI and others. WIFI is used in across the board for conversation but it is not suitable (capable) for all time. WIFI works on radio frequency so it is dismissed day by day owing to more use. owing to this, LIFI is come into existence. It is flexible network and easy to use. The key point is it works on the light waves so there is no chance of blocked compare to WIFI.

LIFI enables a wireless data transmission that use light emitting diodes to transmit data. It was first used by Haralad Hass who is the chair mobile communication at the university of Edinburgh. He gave a demonstration of a LIFI prototype at the TED Global July 2011It is effortlessly clarified are if the LED is on that mean you

transmit the information as computerized 1 and if the LED is off you transmit an advanced 0 or invalid or just no information exchange happens. As one can switch them on and off every now and again. One can transmit data easily because LEDs intensity is modulated so rapidly that human eye can not notice, so the output is form of light appears constant and hence offering permanent connectivity. For connect with LIFI the following factors are necessary

--presence of light

--Line of Sight(LOS)

--For better performance use fluorescent light & LED.

II. VLC

VLC reffered as an illumination source(e.g. a light bulb) which is addition illumination using the same light signal so in terms.

VLC= illumination + communication

the flash light is switched on and off extremely quickly via a computer, then we cannot see the data and the flash light appears to emitting a constant light, so now we have illumination and communication and this does fits our definition of VLC.[1]

III. HISTORY OF LIFI

Harald Hass who teaches at the university of Edinburgh in Scotland coined the term “LIFI” at his TED global talk where he introduced the idea of “wireless data from every light”. He is executive of versatile correspondences at the college of Edinburgh and major supporter of pure LIFI..

 ISBN: 978-93-86171-80-1

The general term noticeable light correspondence (VLC) whose history goes back to the 1880s incorporates any utilization of the obvious light parcel of the electromagnetic range to transmit data. Hass advanced this innovation in his 2011 Ted worldwide talks. In October 2011, organizations and industry bunches shaped the LIFI consortium, to advance rapid optical remote framework and conquer the constrained measure of radio based remote range accessible by misusing a totally distinctive part of the electromagnetic range. Various organizations offer uni-directional VLC products, which is not the same as LIFI-a term characterized by the IEEE 802.15.7r1 institutionalization board of trustees. VLC innovation was shown in 2012 utilizing LIFI. In October 2013,it was accounted for Chinese makes were chipping away at LIFI advancement packs. In 2014 another record was set up by sisoft that could exchange information at rates of up to Gbits/s over a light range radiated by LED lamps.[2]

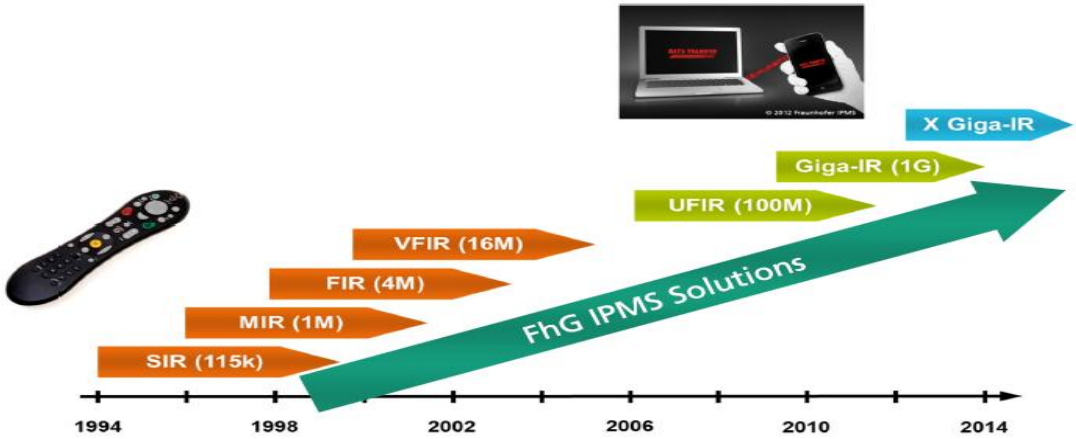

IV. WORKING OF LIFI

LIFI is an distinctive light exchange. VLC frameworks for information transmission. A basic VLC framework has two qualifying parts: 1) no less than one equipment with a photodiode ready to get light flags and 2) a light source furnished with a sigma preparing unit. A VLC light source could include a fluorescent or light transmitting diode (LED) knob. Since a vigorous LIFI framework requires to a great degree high rates of light yield, LED globules are most perfect for executing LIFI.

Driven can be exchanged on and off to produce computerized series of 1s and 0s. Information can be encoded in the light to create another information stream by shifting the gleaming rate of the LED. Driven enlightenment can be utilized as a correspondence source. As the glinting rate is so quick, the LED yield seems consistent to the human eye. An information rate of more noteworthy than 100 Mbps is conceivable by utilizing fast LEDs with fitting multiplexing procedures. VLC information rate can be expanded by parallel information transmission utilizing LED exhibits where every LED transmits an alternate information stream.

 ISBN: 978-93-86171-80-1

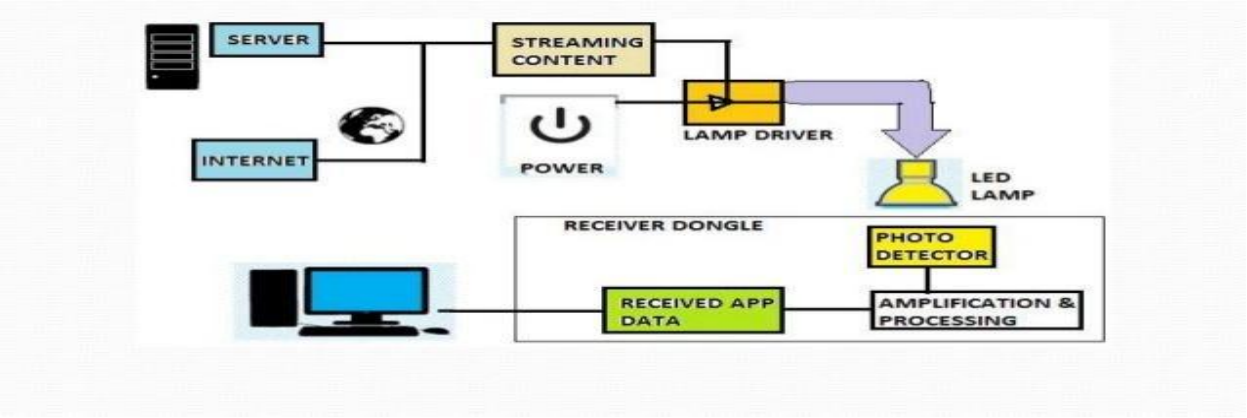

There are motivations to incline toward LED as the light source in VLC while a considerable measure of other enlightenment equipments like fluorescent light, radiant globule and so forth are accessible. LIFI innovation utilizes semiconductor gadget LED light that quickly generate double flags which can be controlled to send information by modest changes in adequacy. Utilizing this creative innovation 10000 to 20000 bits for every second of information can be transmitted at the same time in parallel utilizing a one of a kind sign handling innovation and unique regulation.

V. APPLICATIONS

- Health technologies
- Airlines
- Under sea working
- Information Delegation

VI. POWER HOUSE USAGE LIFI

Wi-Fi works on radio waves that is major obstacle to create connection in power house. Wi-Fi generate the obstacle of blocked or wrong transmission of data. Apart from this, LIFI works on light waves that are not interrupted by other kind of waves. LIFI is quick path to transmit the data and safe way to exchange the information. Any kind of data about employees, bills share with head in few seconds. LIFI is cost effective and cheaper technology in this sector. It is more secure. In other words we can say that we can use the LIFI network in a power house because in a power house, mostly uses the light every time. Radio waves may be corrupted or less power at a user. Here we can use the better and faithful network which is known as a LIFI. Radio wave can be hacked by someone because radio waves are always gone to circularly areas. These waves are often cross the limit of the area. When these waves are cross the limit of then anyone can hack these waves or data. Here LIFI cannot cross the wall or doors. No one attacks to hack the LIFI network outside of the limit.

So LIFI is better then Wi-Fi in a power house

 ISBN: 978-93-86171-80-1

VII. PROS OF LIFI

1. Efficiency – LIFI takes a shot at unmistakable light innovation. Since homes purposes, the same wellspring of light can be utilized to transmit information, consequently it is extremely productive as far as expenses and also vitality [4].
2. Availability—whenever there is a light source, there can be internet Light bulbs are present everywhere –in homes, offices and transmission could be available everywhere.
3. Security—one main merit of LIFI is protection. Since light cannot pass through opaque structures, LIFI internet is available only to the users within room and cannot be breached by users in other rooms or buildings(skyscrapers).

VIII. CONS

- Internet cannot be used without light source. This could limit the locations situations in which LIFI could be used.
- Because it uses visible light and light cannot penetrate walls, the signals range is limited by physical barriers.
- Sunlight will interfere the signals, resulting in interrupted internet.
- A whole new infrastructure for LIFI would need to be constructed.

IX. COMPARISON BETWEEN LI-FI AND WI-FI

LIFI an acronym for **Light Fidelity** and it is basically a high- speed, bidirectional as well as completely-networked wireless communication technology which is somewhat similar to Wi-Fi in more than a single way. Being a bi-directional technology, LIFI is 100 times faster in comparison to Wi-Fi and it can reach speed of up to 224 gigabits per second.[5]

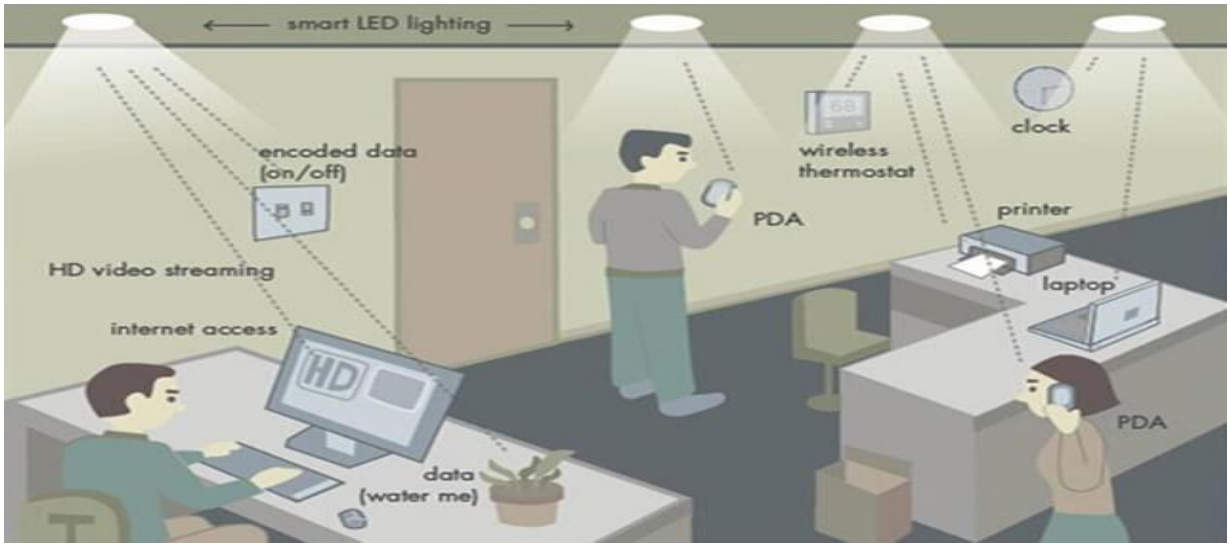

Fig.5.LiFi System connecting devices in a room[2]

Parameter	LI-FI	WI-FI
Speed	High	High
Spectrum	10,000times broader than WI-FI	Narrow spectrum
Data density	High	Low
Security	High	Less secure
Reliability	Medium	Medium
Bandwidth	High	Low
Transmit/ Receive power	High	Medium
Ecological impact	Low	Medium
Device to device connectivity	High	High
Obstacle interference	High	Low
Bill of materials	High	Medium
Parameter	LI-FI	WI-FI
Market maturity	Low	High
Latency	Microseconds	Milliseconds

X. IN COMPENDIUM

Conceivable outcomes for future use are inexhaustible. In the event that this innovation can be put into down to earth utilize, each knob can be utilized something like a WI-FI hotspot to transmit remote information and we will proceed toward the cleaner greener, more secure and eye catching destiny. The concept of LI-FI at present drawing a great deal interest not minimum since it might offer a bona fide and huge productive other option to radio-based remote. As a developing numerous individuals and their many equipments access remote web, the wireless transmissions are turning out to be progressively stopped up, making it more hard to get a solid, fast flag. Optical cell systems in view of LI-FI are the connection between future vitality effective enlightenment and cell interchanges. They can likewise outfit unregulated, unused and immense measure of electromagnetic range and can even empower ever littler cells without the requirement for new framework.

The issues of lack of radio recurrence can be handled effortlessly with just restriction being that it works in direct viewable pathway of light. There are no deadlocks to innovation and science. Presently both light radio waves can be utilized at the same time to exchange information and signs.

REFERENCE

[1.] http://visiblelightcomm.com/what-is-visible-light-communication-vlc/

[2.] https://purelifi.com/lifi-products/li-flame/

[3.] http://www.axrtek.com/how-does-liFi-work.html

[4.] https://www.techopedia.com/7/31772/technology-trends/what-are-the-advantages-and-disadvantages-of-li-fi-technology

[5.] http://www.zerodollartips.com/difference-between-li-fi-and-wi-fi-technology/

[6.] https://www.google.co.in/url?sa=t&rct=j&q=&esrc=s&source=web&cd=1&cad=rja&uact=8&ved=0ahUKEwjYn86n6KXOAhUKu48KHaIjBG4QFggbMAA&url=http%3A%2F%2Fgimt.edu.in%2FclientFiles%2FFILE_REPO%2F2012%2FNOV%2F23%2F1353645362045%2F69.pdf&usg=AFQjCNEwmQzALHe-PQX5zhcfMSLq24vdaQ&bvm=bv.128987424,d.c2I

[7.] https://www.google.co.in/url?sa=t&rct=j&q=&esrc=s&source=web&cd=10&cad=rja&uact=8&ved=0ahUKEwjYn86n6KXOAhUKu48KHaIjBG4QFghdMAk&url=http%3A%2F%2Fwww.ijirae.com%2Fvolumes%2FVol2%2Fiss6%2F01.JNAE10083.pdf&usg=AFQjCNEZW1O_oQgKeFO6c5_euyCWfGMaYw

[8.] https://www.google.co.in/url?sa=t&rct=j&q=&esrc=s&source=web&cd=4&cad=rja&uact=8&ved=0ahUKEwjYn86n6KXOAhUKu48KHaIjBG4QFggwMAM&url=http%3A%2F%2Fwww.ripublication.com%2Firph%2Fijict_spl%2Fijictv4n16spl_11.pdf&usg=AFQjCNFCp47rQtmhgGp9LP8G2VXnkYT7xQ