International Conference on Advancements in Engineering, Technology and Sciences
Dhaanish Ahmed College of Engineering, Chennai (ICAETS-2018)
(Approved by AICTE, New Delhi and Affiliated to Anna University, Chennai)
16th-17th March 2018 www.conferenceworld.in ISBN : 978-93-87793-11-8

PERFORMANCE ANALYSIS OF OPTICAL TRANSMISSION SYSTEM USING DIFFERENT MODULATION FORMATS

Sri Abirami Devi.S[1], Dr.N.Victor Jaya[2]

[1,2]Department of Physics, College of Engineering guindy, Chennai, Anna University, (India)

ABSTRACT

This paper investigates the performance of the optical transmission system based on the transmission quality of the different modulation formats. Differential phase shift keying (DPSK) in both return to zero (RZ) and carrier suppressed return to zero (CSRZ) can be generated through the Mach-Zehnder Modulator (MZM). The proposed combination of DPSK and RZ/CSRZ expected to be more efficient with high transmission quality and cost-effective. This paper presents the simulative performance analysis by comparing the bit error rate of both RZ/CSRZ DPSK. The transmission quality of RZ/CSRZ DPSK has been discussed and analyzed.

Keywords: Bit error rate (BER), Carrier Suppressed Return-to-zero (CSRZ-DPSK), High speed transmission, Return-to-zero Differential phase shift keying (RZ-DPSK), Quality Factor.

I. INTRODUCTION

The first step to design the optical communication system is how the electrical signal would be converted into optical bit stream. There are two choices for the modulation format of the resulting optical bit stream known as the return to zero (RZ) and non-return to zero (NRZ). CSRZ is a special form of Return to Zero (RZ) where the carrier is suppressed. Dispersion tolerance of CSRZ can be improved due to its reduced spectral width in high bit rate systems. There is no carrier component in Carrier suppressed Return to Zero (CSRZ). The difference between RZ and CSRZ signal format is that the CSRZ signal has a phase shift of π with adjacent bits. By comparing the performance of NRZ, RZ, CSRZ modulation formats, CSRZ has the lowest BER value. Hence from the analyzed details, CSRZ modulation format is more efficient for the long distance optical communication system due to its low value of BER and tolerance to the dispersion at high bit rates.

DPSK signal is preferred for long distance communication due to its high bit rate. In DPSK, the phase of the modulated signal is shifted relative to the previous signal and also it doesn't have any reference signal. It conveys the

data by changing the phase of the carrier wave. DPSK encodes the information by using phase difference between the neighboring bits. DPSK signal converts the phase difference into intensity signal which can be converted into electrical signal by the photodetector. Generation of DPSK signal uses Mach-Zehnder Modulator for the phase difference of the encoded data. In general, RZ/CSRZ DPSK is generated by two Mach-Zehnder Modulator. First Mach-Zehnder Modulator is used for the phase difference of the signal. And the second Mach-Zehnder Modulator is used for the pulse carving to generate RZ and CSRZ format. This paper compares the performance of RZ-DPSK and CSRZ-DPSK in Opti system by BER and Q-Factor.

1.1 GENERATION OF CSRZ SIGNAL

The generation of a CSRZ optical signal requires two electro-optic modulators. The first Mach-Zehnder modulator encodes the NRZ data. The generated NRZ optical signal is modulated by the second Mach Zehnder modulator to generate a CSRZ optical signal. Standard form CSRZ is generated by a Mach–Zehnder modulator (MZM), driven by sinusoidal waves at half the bit rate B_R. This gives rise to characteristically broad pulses. The characteristic properties of a CSRZ signal are those to have a spectrum similar to that of an RZ signal, except that frequency peaks are shifted by $B_R/2$ with respect to RZ.

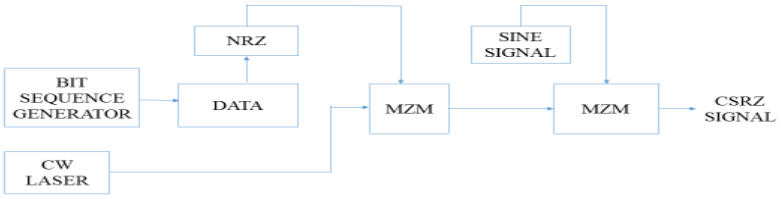

Fig 1. Block Diagram for Generation of Carrier Suppressed Return-to-Zero (CSRZ) signal

II. DESIGN METHODOLOGY

Design and simulation implementation of this paper is done by using Opti system software. Different optical modulation formats designed and simulated using Opti system 15.0. Opti system is a comprehensive software design that enables users to plan, test, and simulate optical links in the transmission layer of modern optical networks. A huge selection of optical and wireless components is offered for planning and implementing a full optical network by this tool, which is a low cost and time-saving approach, allowing the researcher to work in a highly effective manner. Different optical modulation formats designed and simulated using Opti system software. Optical communication system consists of a transmitter, a transmission channel and receiver. Transmitter consists a continuous wave laser (CW), pseudo random bit sequence generator (PRBS), pulse modulation generator and

modulator. Single mode Optical fiber (SMF) is used as a transmission channel. Receiver side consists a photodetector.

III. SIMULATION DESIGN AND IMPLEMENTATION

RZ/CSRZ-DPSK signal is generated by two Mach-Zehnder modulators (MZMs). First Mach-Zehnder Modulator is used for phase modulation, and the second Mach-Zehnder Modulator is for pulse carving to generate RZ or CSRZ format.

3.1 DESIGN OF RZ-DPSK SIGNAL

RZ-DPSK signal is obtained by using a dual-drive MZM and two high-speed differential amplifiers. A very important characteristic of RZ-DPSK is that its signal power is always constant. Mach-Zehnder modulator is used for the phase modulation in the RZ-DPSK modulation.

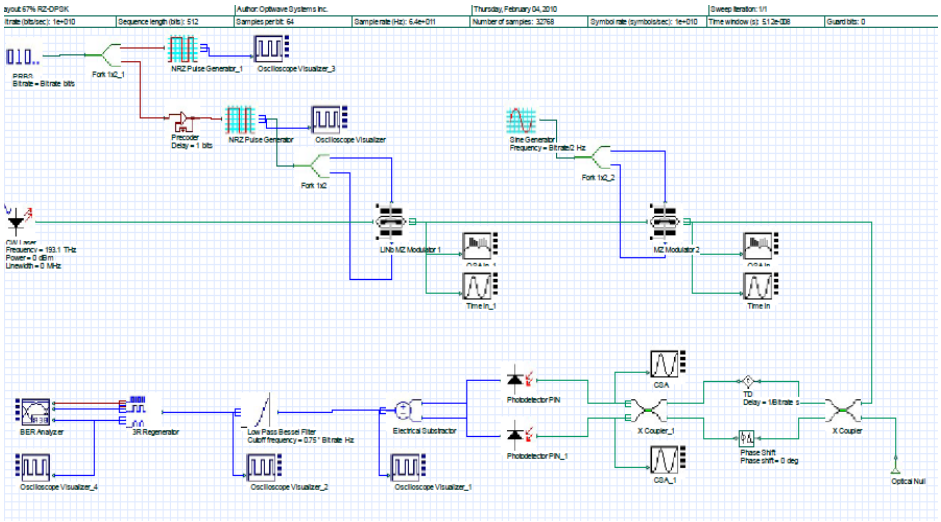

Fig 2. Design of RZ-DPSK modulation

3.2 DESIGN OF CSRZ-DPSK SIGNAL

To generate the CSRZ-DPSK signal with one MZM, one approach is to use an electrically encoding process to replace the pulse-carving performed by a second MZM in conventional schemes. A differential pre-coded data sequence and a B/2 (half of bit rate B) is sent to a low pass filter to generate a sinusoidal carved bipolar signal. This signal is then directly amplified to drive a Mach-Zehnder. CSRZ-DPSK offers similar improved performance according to publications over its NRZ counter parts. The transmitter consists of a laser, followed by two dual-drive intensity modulators. This method produced phase modulation with a near-perfect 180° phase shift. The CSRZ-DPSK pulses possess a RZ signal shape and due to the reduced spectral width

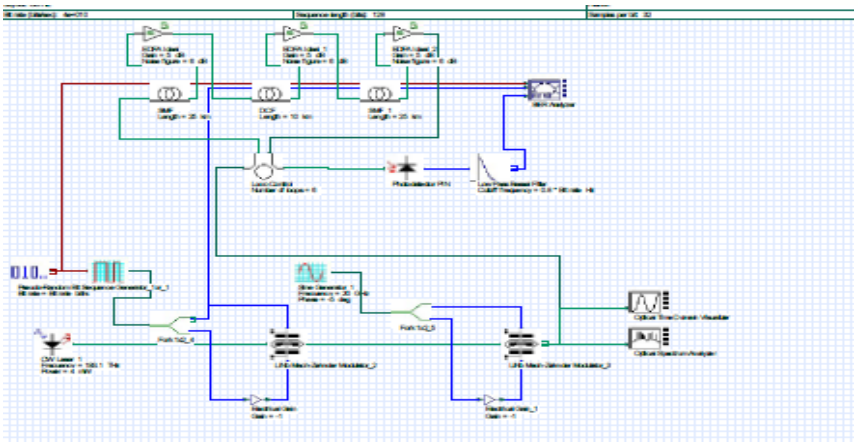

Fig 3. Design of CSRZ-DPSK modulation

IV. RESULTS AND ANALYSIS

BER analyzer of the eye diagram for the CSRZ-DPSK and RZ-DPSK modulation formats in the optisystem software simulation results shown in Fig 4 and Fig 5. The results of eye diagram has been visualized in terms of Q-factor. From fig 4 and fig 5, Q- Factor of CSRZ-DPSK more efficient than the RZ-DPSK format. The eye pattern of the RZ- DPSK is preferably clear with less distortions. Even though the result of the RZ-DPSK signal is clear with less distortions, CSRZ-DPSK is more preferable for long distance communication since the noise level of the CSRZ-DPSK is lesser than the RZ-DPSK.

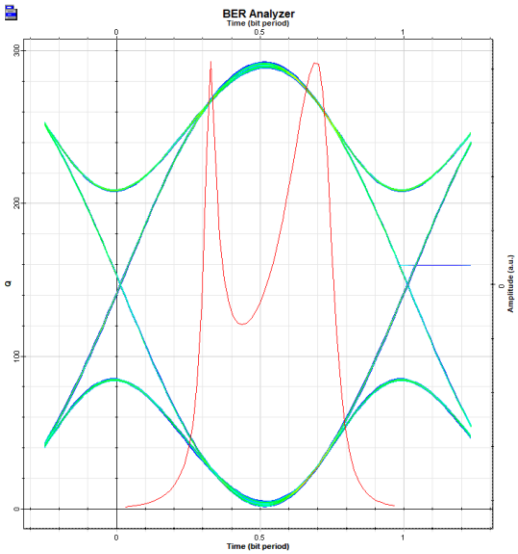

Fig 4. Eye diagram of the CSRZ-DPSK

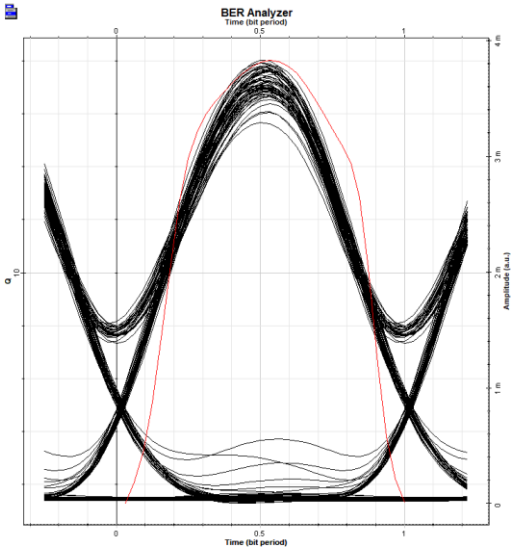

Fig 5. Eye diagram of the RZ-DPSK

From Fig 6, Fig 7 the center frequency of the spectrum width CSRZ-DPSK signal is 193 HZ. The side lobe spectral power and the speed of the CSRZ-DPSK decreases faster than the RZ-DPSK. The frequency spectral width and the spectral power fell faster than the RZ-DPSK.

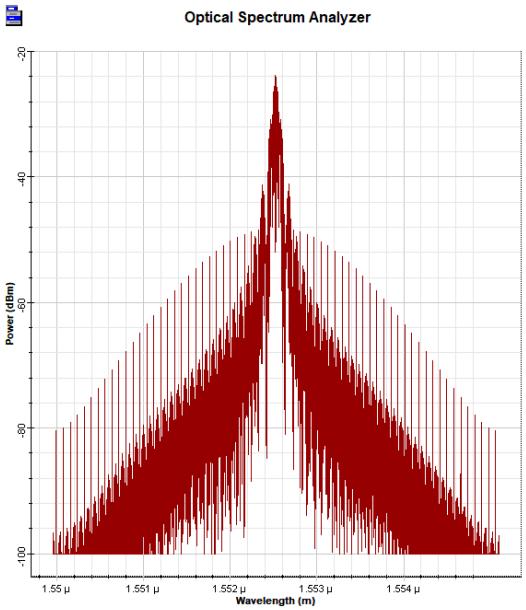

Fig 6. Optical spectrum of RZ-DPSK

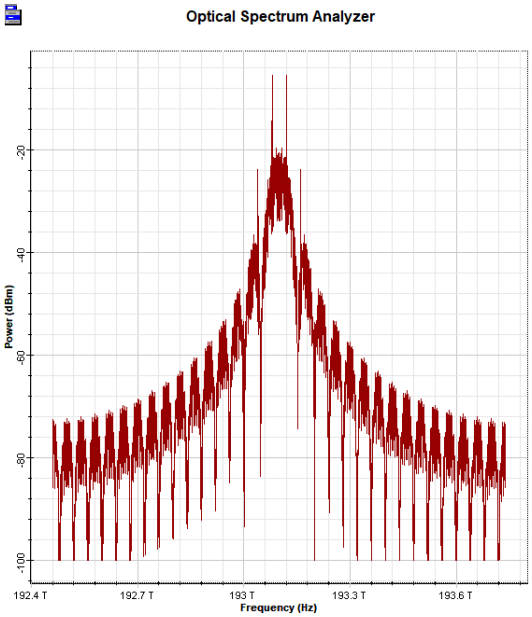

Fig 7. Optical spectrum of CSRZ-DPSK

V. CONCLUSION

In this paper we use the RZ-DPSK and CSRZ-DPSK in Optisystem software simulation based on high transmission speed, we can see that the spectral width of the RZ-DPSK is minimum comparing CSRZ-DPSK. From the BER and Q-factor of the, the results has been analyzed that the noise of the CSRZ-DPSK signal is less. Hence the quality of the signal for the longdistance communication can be preferably use the CSRZ-DPSK signal. The spectral width of the CSRZ-DPSK signal is larger than the RZ-DPSK signal. The quality of the signal has been discussed through the eye diagram. The eye opening of the both RZ/CSRZ DPSK signal is clear. Hence both signal quality is high where the distortion level of the CSRZ-DPSK signal is less. Hence the CSRZ-DPSK signal can be used for the high speed transmission.

REFERENCES

[1] Simon S.Haykin ,"Digital communication systems (4th Edition)".

[2] C. Wree, J. Leibrich, and W. Rosenkranz, "RZ-DQPSK format with high spectral efficiency and high robustness towards fiber nonlinearities," European Conference on Optical Communication (ECOC), 4(9.6.6), September 2002.

[3] John Wiley & Sons, Inc, " Fiber-Optic Communications Systems", Third Edition,2002

[4] M.I.Hayee and A.E.Willner, "NRZ versus RZ in 10-40-Gb/s dispersion-managed WDM transmission systems,"IEEE Photonics Technology Letters, 2003.

[5] Sun Qiang, Zhou Xu, "Optical fiber communication system and its applications " Beijing: The Press of Tsinghua University, 2004

[6] Automation net "Opti System software for the design of optical communication system" http://www.zidonghua.net.cn