International Conference on Advancements in Engineering, Technology and Sciences
Dhaanish Ahmed College of Engineering, Chennai (ICAETS-2018)
(Approved by AICTE, New Delhi and Affiliated to Anna University, Chennai)
16th-17th March 2018 www.conferenceworld.in ISBN : 978-93-87793-11-8

SIMULATION AND ANALYSIS OF OPTICAL COMMUNICATION SYSTEM USING NRZ, QAM, PSK AND OQPSK

R.Ishwarya[1], Dr.N.Victor Jaya[2]

[1,2]Department of physics, College of Engineering Guindy,
Anna University, Chennai(India)

ABSTRACT

In this paper we simulate an optical transmission system in optical fiber using NRZ, QAM, PSK and OQPSK.The optical fiber system used in telecommunication system. This system has small size or dimension, low loss and low interference from outside environment.using fiber bragg grating as the dispersion compensator in the fiber optic cable. We are using FBG in the simulation as because it offers more bandwidth. Optisystem(15.0) software is used to analyse the optical transmission system.In the simulation of the communication system appropriate values of the input power , fiber cable length and attenuation coefficient is taken around the cable section and the output power , noise figure , gain is found out at the receiver

Keywords :NRZ,QAM,PSK,OQPSK,Fiber Bragg Grating,Optisystem(15.0) Software.

I. INTRODUCTION

Any transmission system consists of three basic components , that are fiber component such as light sources at input, fiber opticcable and light detector at the output.Here we have used fiber bragg grating as in thedesign of optical transmission system. FBG is linear, strong and compact component which helps in getting maximum compression ratio. It can also act like dispersion compensator as it can be used in compensating chromatic dispersion. .

OptiSystem is a comprehensive software design suite that enables users to plan, test, and simulate optical links in the transmission layer of modern optical networks.Through the use of this software optical transmission system can be designed from a small component to a huge system.Optical fiber modelling can be achieved in realistic manner in this software.

In this study of optical communication system we are analysing the different effects on the components by having changes in the parameters . Parameters such as output power, noise figure , attenuation coefficient andgain at the receiver is measured.

II.DESIGN METHODOLOGY

In fiber optic communication data or information is transmitted with the use of light. Fiber optic system consists of three fundamental blocks. First is transmitter which transmit the signal by changing optical signal to anelectrical signal .The fiber optic cable acts like transmission channel and the receiver accepts signal from transmitter.

Firstly we are using NRZ pulses for electrical pulses which are then used in modulation . Apart from the NRZ pulses QAM, PSK and OQPSK is also used.Data signal is scrambled in bit rates using pseudo random bit sequence generator.A pseudorandom binary sequence (PRBS) is a binary sequence that, while generated with a deterministic algorithm, is difficult to predict and exhibits statistical behaviour similar to a truly random sequence.

In the design the continuous wave laser is used and it is externally modulated with the NRZ, PSK,OQPSK,QAMwith the pseudorandom sequence in a Mach-Zehnder modulator with a specified extinction ratio.The principle of interferometry isused in Mach –Zehnder modulator. The interference can be constructive or destructive and It can be determined bythe voltage applied .The output signal is modulated according to the voltage. Single mode optical fiber is used asbecause it allows a single stream of light propagating at once in the core.Data signal can be transmitted at 50km length of fibre. In sending an optical signal a single ray of light is used . Fiber Bragg Grating (FBG) is used tocompensate chromatic dispersion of common fiber which is a part of common single mode fiber that is like agrating. Erbium doped fiber amplifier compensates the losses in an optical transmission system . At the receiving endphotodetector is used which converts the incoming light automatically into the electric current.

In this optical transmission system we have used single mode fiber as it provides with more data rate , low dispersion, and it can also be operated for much longer time.We are using fiber bragg grating for compensating the dispersion and the optimum grating length is made in between 1 to 6 mm by try and error method. Then it is passed through the erbium doped fiber amplifier for amplifying the optical wave as it is needed that the filter loss is

reduced and the signal is amplified before it is being received at the PIN photo detector .

III. SIMULATION DESIGNS AND IMPLEMENTATIONS

The values for the design of the optical transmission system:

- Input power: 5dBm
- Frequency at transmitter: 1550nm
- Fiber length: 50km
- Attenuation coefficient at cable section: 0.2dB/km

3.1 DESIGN FOR NRZ

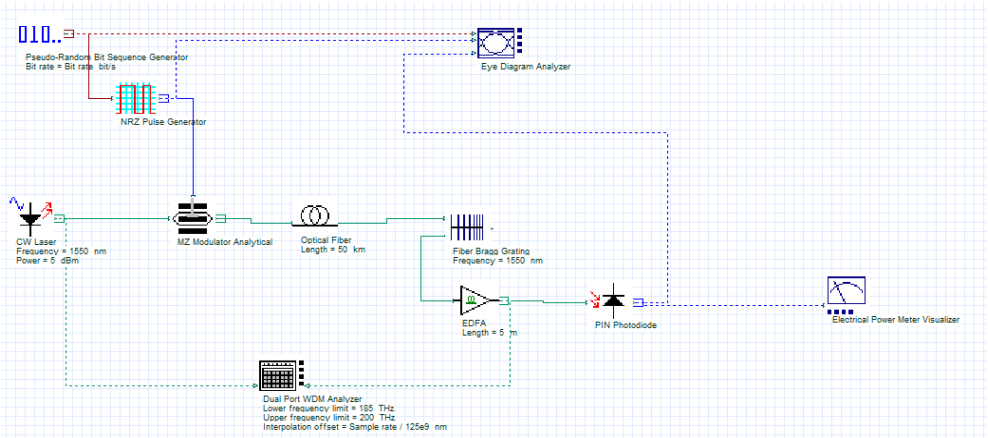

Fig 1. Simulated design using NRZ

3.2 DESIGN FOR QAM

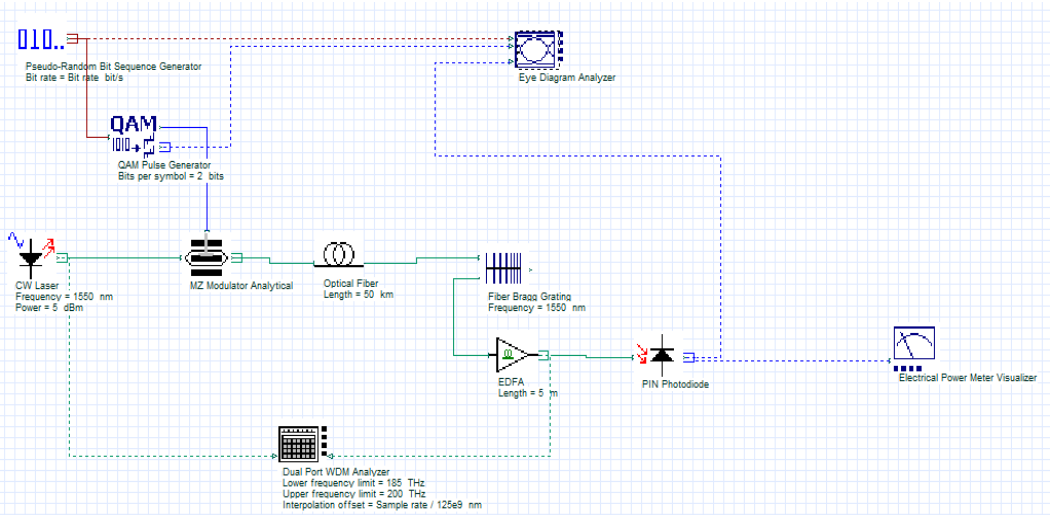

Fig 2. Simulated design using QAM

3.3DESIGN FOR PSK

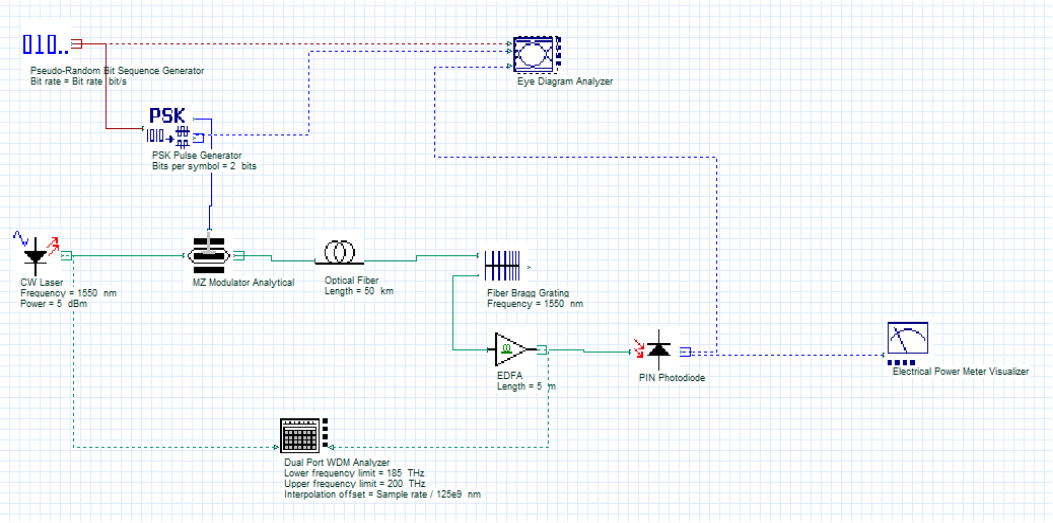

Fig 3. Simulated design using PSK

3.4 DESIGN FOR OQPSK

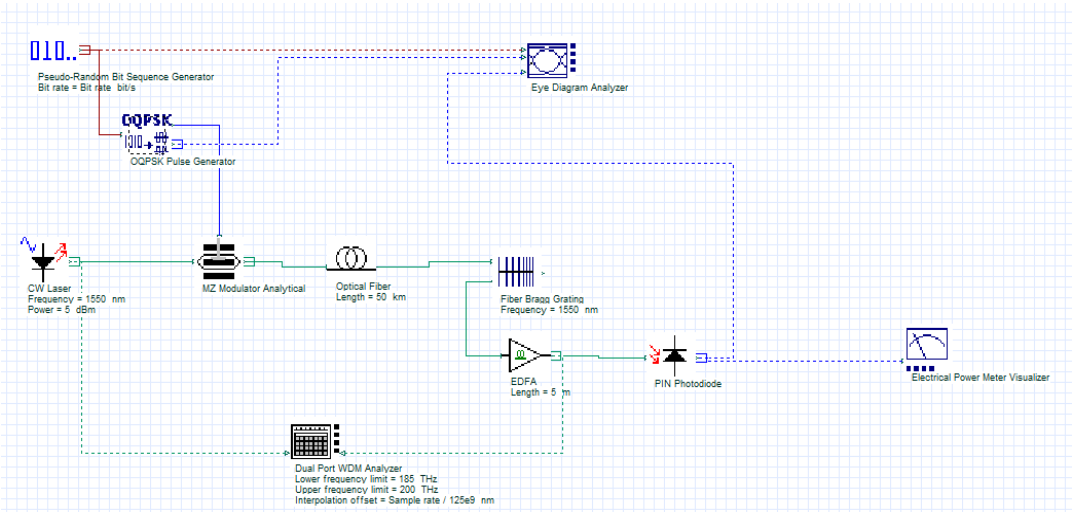

Fig 4. Simulated design using OQPSK

IV RESULTS AND ANALYSIS

We have designed and simulated the optical communication system with the help of optisystem software.We have investigated the eye diagrams and found out the output power, receiver gain, noise figure by putting different values of input power , attenuation coefficient, and length of the fiber cable. The optical amplifier in the transmission system helps in reducing the loss of fiber and in the amplification of the signal before it is

being received by the photodetector. In fig. 1 , fig. 2, fig. 3 and fig. 4 we have simulated the communication system using NRZ , QAM , PSK, OQPSK pulses respectively .

We can see by analysing the data which shows that the value of noise figure isdirectly proportional to the length of the fiber . It can be seen that by increasing the fiber length the gain decreasesbut the noise figure increases linearly with the increase in the fiber length.As the input power is increased the receiver gain of the system decreases and the noise figure risesprogressively.If we increase the attenuation coefficient the noise figure of the system rises as the gain of the system is increasing. Gain of the system is the ratio of the output signal of the amplifier to the input signal . Noise figure tellsus about the level of noise being added to the signal in the amplifier.

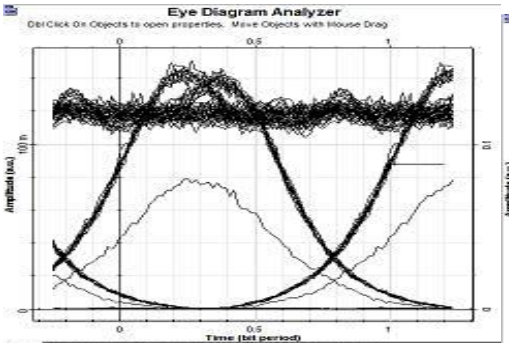

Fig 5. Output of NRZ

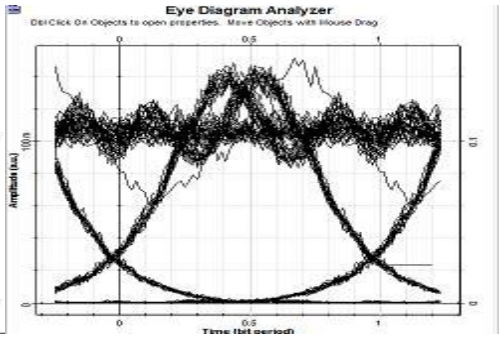

Fig 6. Output of QAM

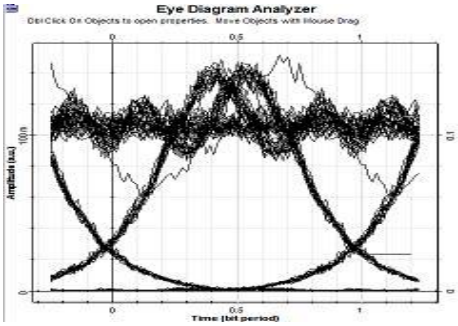

Fig 7. Output of PSK

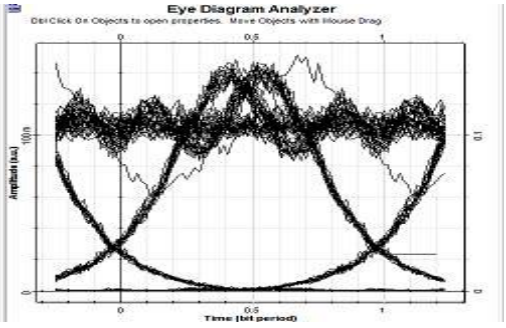

Fig 8. Output of OQPSK

V. CONCLUSION

The information is transmitted in the network through the optical carrier wave from the transmitter to the receiver. The optical transmission system is modelled on the optisystem software and the parameters of the system are found out .Then we analysed the results of the simulation and it could be said that the length of the fiber optical cable and the attenuation coefficient is directly proportional of noise figure. Noise figure tells that how much noise is added to the signal. As the gain is getting lower with the increasing length. Even though the

input power isincreased through the use of EDFA output power is decreased with the compression of the gain. In this paper after having a comparative study we found that the transmission system having the NRZ pulse is best suited for the transmission system as it provides the highest gain and output power among all the pulses we worked upon.

REFERENCES

[1] Parul Singh and RekhaChahar,"Performance analysis of dispersion compensation in optical fiber using DCF"The International Journal of Engineering and Sciences, Vol.3, no.8 , pp. 18-22, 2014.

[2] Prachi Sharma et al, "A Review of the Development in the Field of Fibre Optic Communication Systems", International Journal of Emerging Technology and Advanced Engineering, Vol. 3, no. 5, pp. 113-119, 2013.

[3] Nidhiya Shan and Asha A S, "Simulation and analysis of Optical WDM System Using FBG as Dispersion Compensator ," International Journal of Engineering Research and General Science, Vol. 3,no. 2, pp. 1073-1080 , 2015.

[4] Kaushal Kumar, A.K.Jaiswal, Mukesh Kumar and NileshAgrawal, "Performance analysis of dispersion compensation using Fibre Bragg Grating (FBG) in optical communication", International journal of current engineering and technology, Vol.4, no.3, pp.1527-1531, 2014.

[5] Chong Wing Keong, K R Subramanian, V K Dubey, "Optical Fiber System for Video and Telemetry Signal." Singapore Polytechnic,Electronics and Communication Engineering, School of Electrical and Electronic Engineering, Nanyang Technology University, Singapore. 333