3rd International Conference on Emerging Trends in Engineering and Management Research
Institution of Electronics and Telecommunication Engineers, IETE Indiranagar, Pune, India (ICETEMR-17)
30th July 2017, www.conferenceworld.in ISBN: 978-93-86171-55-9

A Review on Experimental Investigation of Effect of Tool Angle Variation of Orbital form Tool and Auto Feed Table on Geometry and Strength of Rivet and Cycle Time in Portable Orbital Riveting Machine

Taware K.H.[1], Mundhe V.L.[2]

[1]*Department of Mechanical Engineering, BIT Barshi, Solapur,(India)*

[2]*Head of Department of Mechanical Engineering, BIT Barshi, Solapur, (India)*

ABSTRACT

In manufacturing aspect it is very important to know about all machining processes. Conventionally all these processes were performed manually by the workers but that was very tedious work. It is impossible to get higher production in such a case also there is chances of human error in the processes which affects the quality of the product. Today we have been suffering from lack of problem to achieve maximum productivity. it is impossible to get higher production by performing these processes separately on different machines it is time consuming as well as it is very difficult to maintain accuracy in the product. So it is necessary to design and manufacture a machine which performs two or more operation on a single machine.

Orbital riveting is a relatively new technology in which parts are produced by specific movement of tools. Special incremental motion enables smaller contact area between tool and work piece and Therefore, lower forming load and friction. Hence, orbital forging in some cases makes it possible to produce a desired part in only one operation, whereas in conventional riveting two or more operations would be required. However, orbital riveting has number of setbacks, such as more complex machine maintenance and production times. This paper presents a brief overview of Design and Development of Orbital Riveting machine main orbital riveting characteristics and comparison with conventional riveting machine. Auto-cad drawing, 3D model, Actual diagram for specific machine for orbital riveting is present as well.

I. INTRODUCTION

By riveting we mean the upsetting of a rivet to form a head to hold several assembled parts together. The rivet can be in the form of a pin or an eyelet. The conventional riveting process is also referred to as Impact riveting, usually done by manual or machine operation. The manual process is of hammering the rivet to form the head; this process is crude and is performed by the rivet forming head set in the form of a punch which is hammered on the rivet to form the head.

The Machine process is categorized in **two** types:

1.1. PUSH OR HAMMER RIVETING

In this process usually an pneumatic hammer is used where the riveting head or punch is mounted on the machine which is moved to and fro by pneumatic power, the rivet is solid in this case. The rivet is positioned in the hole between the mating parts and then the rivet portion projecting out of the joint is formed by the impact of the rivet head. This process requires considerable force; only fixed joints can be formed. There is a chance of the work-piece to be damaged due to impact. This process is used for joining solid steel elements and finds less application for hollow components.

1.2. PULL RIVETTING

In this process a scissor riveting machine operated either manually or by power (electric / pneumatic) is used. In this process is hollow and the pull force is applied on the nail projecting out of the rivet. The nail is gripped in the gripper head of the machine and is pulled to form the rivet head. This process is relatively fast. This process is used in production of sheet metal bodies, cabins etc.

1.3. PROBLEM STATEMENT

The above mentioned processes of riveting are conventional processes used commercially for making riveted joints, the offer advantages such as fast production rate , possibility of automation etc.but some inherent disadvantages in process limit their use,

1. The head formation by the push method uses excessive force that is applied while forming the head, this leads to the deformation of the parts being riveted, and hence the use of the process is limited to components that are strong and solid.
2. The push or pull process can be used to make the fixed type of riveted joints, as in either of the processes the force applied for formation of head hence parts are virtually fused together , there by permitting no relative motion between the mating parts, hence hinged joint is not possible.
3. Due to application of force while head formation the process cannot be applied to riveting of materials like plastics, glass, ceramics, poly eurathane, etc.
4. Due to impact nature of force application the process are excessively noisy.
5. Special shapes like ladder rungs cannot be riveted by these processes.

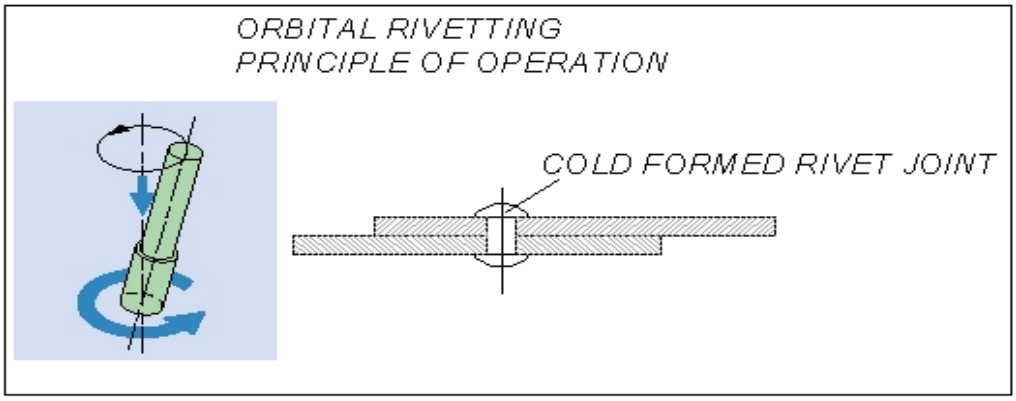

Fig.1:- Orbital riveting principle of operation

II. ORM SET-UP

The orbital riveting machine consists of the following parts:

2.1. Phase Induction motor: - The motor used in the machine is a 3-phase induction motor, Power-0.5 Hp, Speed-1440 rpm, Foot mounted, Frame size-71.

2.2. Motor pulley (2.5"):-The power transmission from motor to the main spindle is done by an open belt drive. Motor pulley is a cast iron pulley (2.5" diameter), single groove 'A-Section', keyed to the motor shaft.

2.3. Spindle Pulley (4"):- Spindle pulley is a cast iron pulley (4" diameter), single groove 'A-Section', keyed to the main spindle. Thus the transmission ration 1:1.6, i.e. the spindle rotates at 900 rpm.

2.4. Belt: - Belt is an 'A-Section' belt with included angle 400 length 29 inches, hence the specification 'A-29'.

2.5. Top Spindle housing:- The top spindle housing is a rectangular element made from structural steel EN9, bolted to the C-frame. It carries the single row deep groove ball bearing 6005zz.

2.6. Bottom Spindle housing:- The bottom spindle housing is a rectangular element made from structural steel EN9, bolted to the C-frame.

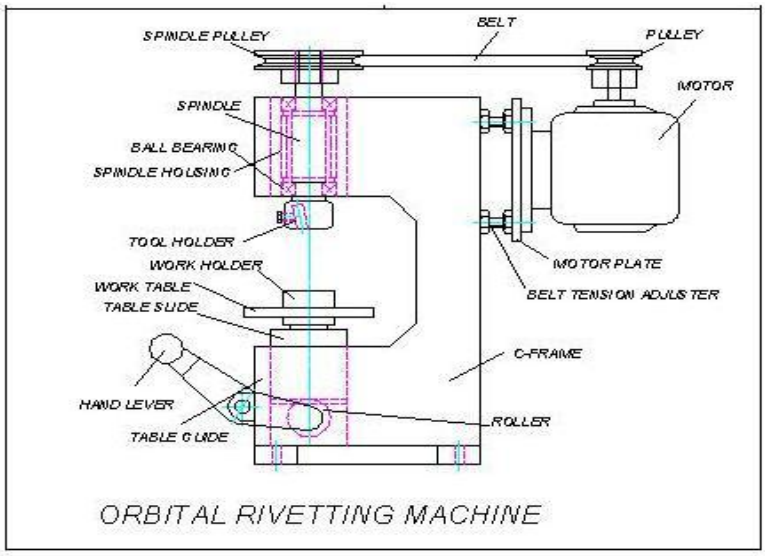

Fig.2:- Orbital riveting machine

2.7. Ball Bearings: - The spindle is held at the top and bottom ends in single row deep groove ball bearings 6005zz. Internal diameter of bearing is 25mm, outside diameter of bearing is 47mm and width of bearing is 12mm

2.8. Spindle:-The spindle is a high grade steel member (EN24), held in heavy duty ball bearings at either ends supported in the bearing housings. The spindle carries the spindle pulley at the top end where as the tool holder at the bottom end. The spindle runs at high speed 900 rpm.

2.9. Tool Holder:-The tool holder is high grade steel member (EN24), keyed to the spindle at the lower end. The tool holder holds the rivet set (tool) at an angle 50, to the spindle axis. The rivet set is held in ball bearing 6002 in the tool holder and is held in position by an internal circlip.

2.10. Rivet set (Tool):-The rivet set or tool is a hardened steel component OHNS (Oil Hardened Non Shrinkage Steel). It is placed at an angle 50, to the spindle axis and is held in the tool holder.

2.11. Work holder:-Work holder is made from structural steel (EN9), it is basically a fixture to the hold the job while carrying out the
Riveting operation. The work holder is held on the work table.

2.12. Work table:-Work table is made from structural steel (EN9); it is basically a table to the hold the work holder while carrying out the riveting operation. The work table is held on the Table slide.

2.13. Table slide:-Table slide is made from structural steel (EN9), it is basically a slide to the move the work table up or down while carrying out the riveting. The Table slide is held in the Table guide.

2.14. Table guide:-Table guide is made from structural steel (EN9), it is basically a guide to the hold the Table slide while it moves up or down while carrying out the riveting operation. The Table guide is bolted to the C-frame.

2.15. Rollers:-Rollers are basically two ball bearings namely 6002 and 6201 held on the end of the Feed handle on the handle roller pin, it moves the table slide up or down when the feed handle is operated. Pin is made from hardened steel (En24).

2.16. Feed handle:-Feed handle is mounted in the handle hinge; it carries the roller at one end and the knob at other end. It moves the table slide up or down when operated.

2.17. Handle Hinge:-Handle hinge is fabricated from MS, it is welded to the C-Frame, it carries the hinge pin on which the feed handle is mounted.

2.18. C-Frame:-The C-Frame is the basic structure of the machine on to which entire assembly of machine is made. It is made of Mild steel.

2.19. Belt Tension adjuster:-Belt tension adjuster is a arrangement to adjust the tension in the open belt drive. The position of the lock nuts is adjusted to adjust the belt tension.

III. WORKING

Motor is started which rotates the main spindle at high speed. The tool or rivet set mounted in the tool holder rotates at high speed. The job to be riveted along with the rivet is placed in the work holder .The feed handle is pressed in the downward direction to lift the table slide and table in the table guide by means of roller arrangement. The tool spins about the rivet projecting out of the joint thereby cold forming the head on the rivet side. The amount of pressure applied depends upon the type of joint i.e., fixed or hinged to be done. After riveting is done, the feed handle is released which brings the table slide down by self-weight. Job is replaced in holder to form the next riveting joint

IV. SCOPE OF EXPERIMENT

A) Design and Development

a) The preliminary problem in conventional process is that of forming force and cycle time. Forming force will be reduced by the geometry of tool head and will be reduced by at least 70 percent , so also cycle time will drastically come down to a mere 40% of the cycle time required in conventional process.

b) The problem that index able head for multiple orientation positions , namely vertical positions, horizontal position is solved by providing machine with the orientations of tool head at 5 degree and 4 degree respectively.

c) The problem that the setting time for the tool set should be minimum is solved using a Quick change riveting head; to enable the operator to quickly change the tool set .The actual rivet tool is fast removable and loadable making the cycle time of tool change extremely negligible.

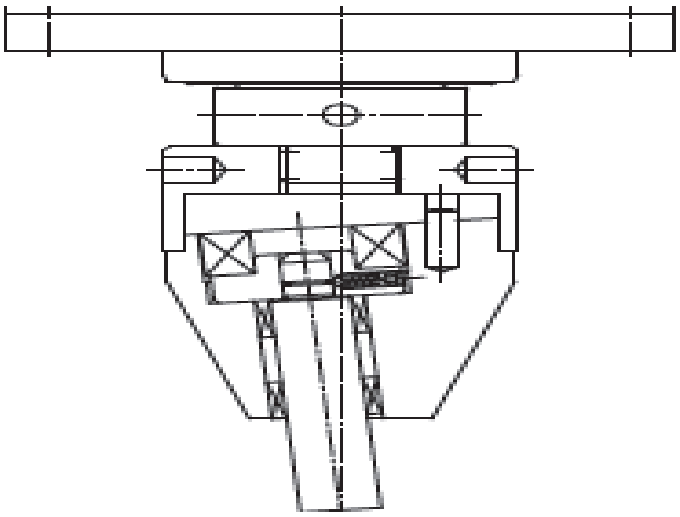

QUICK CHANGE SPIN HEAD

Fig.3. Quick change spin head

d) The problem that fast production rate with the least cycle time is solved by using a auto feed mechanism for fast feed rates. The table will be fed into the rivet to form the desired head shape by a jacking arrangement using a 12 volt motor and screw jack arrangement.

B) Manufacturing of Set-Up

1. Fabrication of orbital riveting head for quick change ability.
2. Fabrication of index able riveting head with auto feed arrangement.
3. Test & Trial of machine for two tool head angles 5 degree and 4 degree
4. Derive performance parameters of machine for rivet head geometrical accuracy, cycle time, strength of joint and comparison of the parameters at two tool head angles.
5. Derive performance parameters of machine for rivet head geometrical accuracy, cycle time, strength of joint and comparison of the parameters at two tool head angles.

VI. TESTING OF SET-UP

1) Test will be conducted for riveting aluminum rivets of 4 mm diameter

A*)* Riveting aluminum rivets of 4 mm diameter -- tool head angle 5 degree

B*)* Riveting aluminum rivets of 4 mm diameter -- tool head angle 4 degree

VII. RESULTS TO STUDY (ANALYSIS)

1) Dimensional tolerances

2) Surface finish

3) Machining time

Graphs:

a) Surface finish VS speed/ Surface finish VS feed/ Surface finish VS depth of cut---with MQL

b) Machining time VS speed / Machining time VS feed / machining time VS depth of cut---with MQL

c) Graphical plotting of tolerance zone with MQL

d) Comparative study will be done using above graphs for EN8K material and results discussion will lead to recommendation of MQL parameters for various Speed/feed/depth of cut for optimal performance.

b) Turning of EN8K material under following conditions – with MQL and additive

1. Variation of cutting speed (v m/min)

2) Variation of feed (f mm/rev)

3) Variation of depth of cut (d mm)

VII. RESULTS TO STUDY (ANALYSIS)

1) Test will be conducted for riveting aluminum rivets of 4 mm diameter

A*)* Riveting aluminum rivets of 4 mm diameter -- tool head angle 5 degree

1. Variation of table feed (mm/min)

1) Dimensional tolerances

2) Cycle time

3) Rivet strength

Graphs:

a) Cycle time VS feed mm/min

b) Rivet strength Vs feed mm/min

c) Graphical plotting of tolerance zone with 5 degree tool angle

B*)* Riveting aluminum rivets of 4 mm diameter -- tool head angle 4 degree

1. Variation of table feed (mm/min)

RESULTS TO STUDY (ANALYSIS)

1) Dimensional tolerances

2) Cycle time

3) Rivet strength

Graphs:

a) Cycle time VS feed mm/min

b) Rivet strength Vs feed mm/min

c) Graphical plotting of tolerance zone with 4 degree tool angle.

VIII. EXPECTED RESULTS FROM PROJECT

1. Effect on Table feed on parameters such as dimension, cycle time and strength
2. Effect on Tool head angle on parameters such as dimension, cycle time and strength
3. Coefficient of correlation between tale feed rate and measured parameters as dimension, cycle time and strength
4. Coefficient of correlation between tool head angle and measured parameters as dimension, cycle time and strength
5. Probability of cycle time value for table feed rate
6. Prediction of probability of strength value for given tool head angle.

IX. CONCLUSION

Orbital riveting is a quiet, non-impact process of cold forming - replacing conventional riveting, staking, and crimping, pressing, welding and other are fastening operations. Orbital riveting can accomplish the same amount of forming work with a fraction (20%) of the force of conventional processes like pull riveting and hammer riveting. It can be used to replace loose fasteners, be applied with exacting process control and be used over a wide spectrum of materials. This machine gives many advantages as personal safety and operational safety because of simple in design and construction and also easy to handle and any one can operate. Extreme operating forces these forces sufficient for obtaining permanent joints. It reduced the cost of machining operation, cost of the assembly operation and cycle time. This can do with orbital riveting machine. We recognize every application is different and there is no one size fits all solution for permanent part assembly.

REFERENCES

[1] Tushar A. Patil, & P. N. Ulhe," Analysis and Design of Drilling Cum Riveting Machine". January 2016, Volume 02. Ref: - PSG Design Data. Pg. No: - 1.10 & 1.12. 1.17

[2] K.G. Sontakke & Prof R. D. Vaidya, "A Review Paper On Design Of Drilling Cum Riveting Machine", November 2014, Volume 01, Issue 06.

[3] Manish Kale & Prof D. A. Mahajan, "A Review on Development of Special Purpose Machine", April 2015, Volume 05, Issue 04.

[4] P.R. Savant, Mr. R. A.Barawade January-March, 2012, "Design and development of SPM - A case study in multi drilling and tapping machine," IJAERS, Vol.1, E-ISSN2249–8974.

[5] Sachen Kumar Jagtap & Mukund Kavade "Orbital Riveting – A Design & Development of New Machine". 27 April 2014 Volume 02, Issue 04.