3rd International Conference on Emerging Trends in Engineering and Management Research
Institution of Electronics and Telecommunication Engineers, IETE Indiranagar, Pune, India (ICETEMR-17)
30th July 2017, www.conferenceworld.in ISBN: 978-93-86171-55-9

Components for Designing an Embedded System for Stone Fruits of Meghalaya

Sumana Bhattacharjee

Ph.D Student , Department of Electronics and Communication Engineering

CMJ University, Meghalaya, Shillong. (India)

ABSTRACT

Fruit Cultivation in Meghalaya is a prominent business sector for earning a good amount of state's revenue. Meghalaya being a home of wide variety of fruits and vegetables holds a unique position in production figures among other states of North-East. Fruit crops are capable of giving higher tonnage of yield per unit area than other field crops.Meghalaya produces several stone fruits such as plum,peach,pear,apricot in a restricted scale. This paper focuses on details of components for designing an embedded system for orchard management of stone fruits that will reduce labour cost, improve tree health, increase fruit production and boost state's economy.

Keywords: Constraints.Microcontroller, Sensors,

I.INTRODUCTION

Meghalaya is a state in north-east India. The name means "the abode of clouds" . The capital is Shillong, known as the "Scotland of the East". Nature has blessed her with abundant rainfall, sun-shine, virgin forests, high plateaus, tumbling waterfalls, crystal clear rivers, meandering streamlets and above all with sturdy, intelligent and hospitable people. Meghalaya is subject to vagaries of the monsoon. The climate varies with altitude. The climate of Khasi and Jaintia Hills is uniquely pleasant and bracing. It is neither too warm in summer nor too cold in winter, but over the plains of Garo Hills, the climate is warm and humid, except in winter. The Meghalayan sky seldom remains free of clouds. The average annual rainfall is about 2600 mm over western Meghalaya, between 2500 to 3000 mm over northern Meghalaya and about 4000 mm over south-eastern Meghalaya. There is a great variation of rainfall over central and southern Meghalaya. At Sohra (Cherrapunjee), the average annual rainfall is as high as 12000 millimetres, but Shillong located at a distance of about fifty kilometres from Sohra receives an average of 2200 mm of rainfall annually.

Meghalaya has suitable climate for cultivation of wide variety of horticulture crops such as fruits, vegetables, spices, aromatic and ornamental plants, medicinal plants and plantation crops. The key fruits grown in the state are pineapple, citrus fruits, banana, papaya and strawberries. Other potential fruits include plums, peaches, apricot,pear, guava, mango, litchi, lemon, etc. Fruits are found to be a rich source of vitamins and minerals. Fruits crops are capable of giving higher tonnage of yield per unit area than other field crops. As the new technologies and developments have gradually become readily available in the country, the cropping and cultivating systems and production practices have also remained witness to significant metamorphosis. Fresh fruits and vegetables export has steadily increased. In order to make the thriving business, the industrial strategy of India has been expanded beginning from the lower level to the huge markets to deal globally. Fresh fruits and

vegetables which are cultivated are send to the small scale vegetable and fruit suppliers, then these items are dispatched to the fruit and vegetable exporters as well as to the local markets.The last few decades recorded an all time high of number of Indian fruit and vegetable exporters and suppliers. Fruit production and cultivation in this country has witnessed a growth of near about 3.9 %, while fruit processing units have also grown about 20 % per year.

These fruits can also be processed in several products like canned fruit, concentrates and fruit juices, dehydrated fruit, jellies and jams. Cultivation of fruits chiefly depends upon the quality of soils, harvest, plantation and a perfect ambience of brilliant minds. There are ample investment opportunities for the expansion of export market for fruit cultivation in Meghalaya. But the low level of industrialization and the poor infrastructure base acts as a barrier to the interest of the state's economy. Plums, peaches, pear, apricots can be grown in abundance in Meghalaya. This is because Meghalaya has favourable soil and climatic conditions for stone fruit cultivation and thus holds a huge horticulture potential and also a great scope to augment business prospect.

II. COMPONENTS USED

If we buy the components then the design time will be reduced and also the implementation speed will increase. The following components are used for designing an all-purpose embedded system for stone fruits of Meghalaya:

Arduino mega 2560: The Arduino mega 2560 board is shown below:

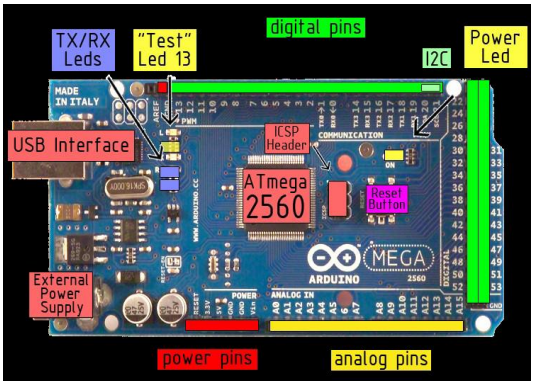

The Arduino Mega 2560 is a microcontroller board based on the ATmega2560. It has 54 digital input/output pins (of which 14 can be used as PWM outputs), 16 analog inputs, 4 UARTs (hardware serial ports), a 16 MHz crystal oscillator, a USB connection, a power jack, an ICSP header, and a reset button. It contains everything needed to support the microcontroller; simply connect it to a computer with a USB cable or power it with a AC-to-DC adapter or battery to get started. The Arduino Mega2560 can be programmed with the Arduino software. The Atmega2560 on the Arduino Mega comes preburned with a bootloader that allows us to upload new code to it without the use of an external hardware programmer.

Rain Sensor Module: The rain sensor module is an easy tool for rain detection. It can be used as a switch when raindrop falls through the raining board and also for measuring rainfall intensity. The module features, a rain board and the control board that is separate for more convenience, power indicator LED and an adjustable sensitivity though a potentiometer. The analog output is used in detection of drops in the amount of rainfall.

Connected to 5V power supply, the LED will turn on when induction board has no rain drop, and D0 output is high. When dropping a little amount water, D0 output is low, the switch indicator will turn on. Brush off the water droplets, and when restored to the initial state, outputs high level.

The rain sensor module is shown below:

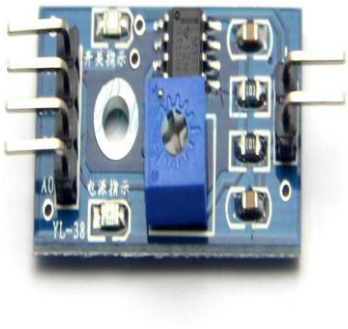

Soil Moisture Sensor: The soil moisture sensor is shown below:

There are two types of soil moisture sensor.One is frequency domain sensor,which has an oscillating circuit.It measures the soil water content by measuring the soil's dielectric constant,which determines the velocity of an electromagnetic wave or pulse through the soil. When the soil's water content increases, the dielectric also increases, which can be used to estimate how much water the soil holds.The other one is neutron moisture gauge which utilise the moderator properties of water for neutrons. The principle is that fast neutrons are emitted from a decaying radioactive source, and when they collide with particles having the same mass as a neutron (i.e, protons,H+), they slow down. As the main source of hydrogen in soil is water, so by measuring the density of slowed-down neutrons around the probe can estimate the volume fraction of water content the soil holds. The pin configuration of soil moisture sensor is shown below:

Pin	Definition
Vcc	5V
GND	GND
D0	Digital output interface(0 and 1)
A0	Analog output interface

LM393 Driver: It consists of two independent low voltage comparators designed to operate from a single supply over a wide range of voltages. Operation from split power supplies is also possible. These comparators also have a unique characteristic in that the input common-mode voltage range includes ground even though operated from a single power supply voltage. Input offset voltage specifications as low as 2.0 mV make this device an excellent selection for many applications in consumer automotive and industrial electronics.

DHT11 Humidity & Temperature Sensor: This DFRobot DHT11 Temperature & Humidity Sensor features a temperature & humidity sensor complex with a calibrated digital signal output. By using the exclusive digital-signal-acquisition technique and temperature & humidity sensing technology, it ensures high reliability and excellent long-term stability. This sensor includes a resistive-type humidity measurement component and an NTC temperature measurement component, and connects to a high-performance 8-bit microcontroller, offering excellent quality, fast response, anti-interference ability and cost-effectiveness. Each DHT11 element is strictly calibrated in the laboratory that is extremely accurate on humidity calibration. The calibration coefficients are stored as programmes in the OTP memory, which are used by the sensor's internal signal detecting process. The single-wire serial interface makes system integration quick and easy. Its small size, low power consumption and up-to-20 meter signal transmission making it the best choice for various applications, including those most demanding ones. The component is 4-pin single row pin package. The DHT11 sensor is shown below:

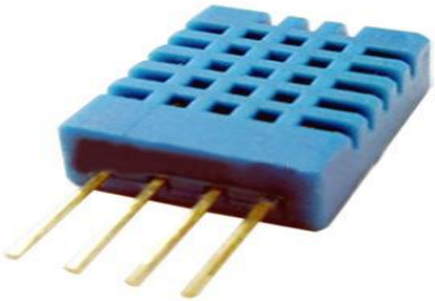

Ultra sonic Sensor: This is a low cost Ultrasonic Distance Sensor provides a non-contact distance measurement with a fine accuracy of 3mm. The module is capable of measuring distance from obstacles in range of 2 cm to 400 cm or 1" to 3 Ft. Unlike IR sensors, the performance of this sensor is not dependent on the sunlight or color of the object. The module comes in a compact form factor with a ultrasonic transmitter, receiver and signal conditioning circuit on-board.

To start measurement, the Trig pin of SR04 must receive a pulse of high (5V) for at least 10µs, this will initiate the sensor will transmit out 8 cycle of ultrasonic burst at 40kHz and wait for the reflected ultrasonic burst. When the sensor detected ultrasonic from receiver, it will set the Echo pin to high (5V) and delay for a period (width) which proportion to distance. To obtain the distance, measure the width (Ton) of Echo pin.

Time = Width of Echo pulse, in µS (micro second)

- Distance in centimetres = Time / 58
- Distance in inches = Time / 148
- Or we can utilize the speed of sound, which is 340m/s

The ultrasonic sensor is shown below:

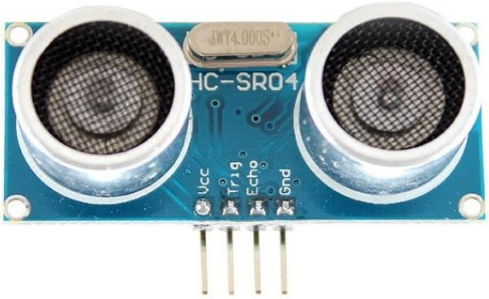

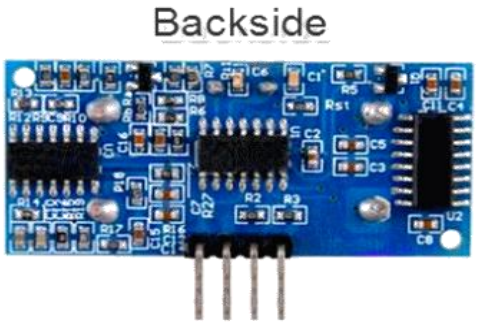

pH Sensor: "pH stands for power of hydrogen, which is a measurement of the hydrogen ion concentration in the body. The total pH scale ranges from 1 to 14, with 7 considered to be neutral. A pH less than 7 is said to be acidic and solutions with a pH greater than 7 are basic or alkaline". The analog pH sensor/meter kit is specially designed for Arduino controllers and has built-in simple, convenient and practical connection and features. It has an LED which works as the Power Indicator, a BNC connector and PH2.0 sensor interface. To use it, just connect the pH sensor with BNC connector, and plug the PH2.0 interface into the analog input port of any Arduino controller. The pH sensor kit is shown below:

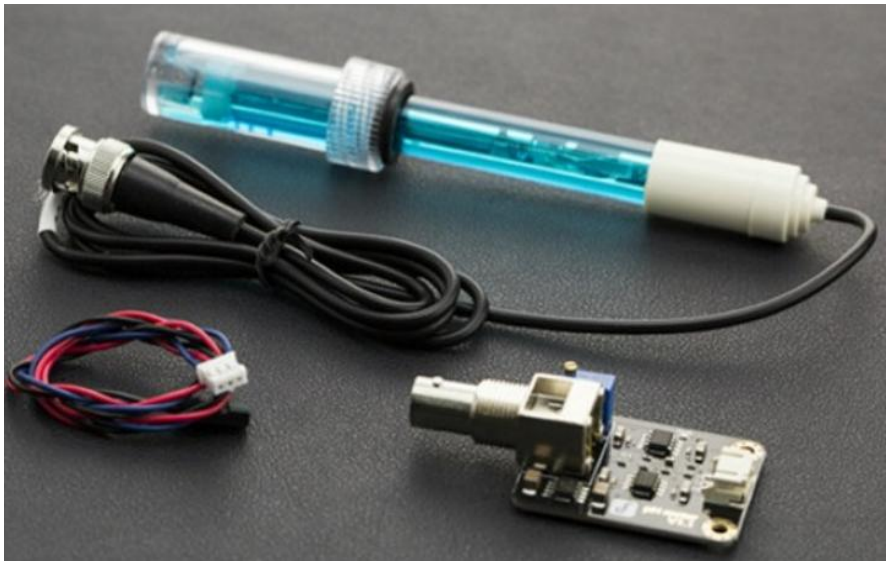

Water flow sensor: The YF-S201 Hall Effect Water Flow Meter / Sensor sits in line with our water line and contains a pinwheel sensor to measure how much liquid has moved through it. There's an integrated magnetic hall effect sensor that outputs an electrical pulse with every revolution. The hall effect sensor is sealed from the water pipe and allows the sensor to stay safe and dry.

The sensor comes with three wires: red (5-24VDC power), black (ground) and yellow (Hall effect pulse output). By counting the pulses from the output of the sensor, the water flow can be easily calculated. Each pulse is approximately 2.25 milliliters. The working voltage is 5 to 18V DC (min tested working voltage 4.5V) and the working flow rate is 1 to 30 Liters/Minute. The connection details are : Red wire : +5V ; Black wire : GND ; Yellow wire : PWM output. The water flow sensor is shown below:

Solenoid Valve: The 12V Solenoid Valve - 3/4" is a controlled fluid valve. Simply connect a fluid source to the 3/4" threaded inlet and it will interrupt the flow until 12V is applied to the fast-on connectors on the solenoid.

The solenoid coil is used to translate the electric pulses into hydraulic pulses that enables opening and closing of specific solenoid valves. Solenoid coil, when mounted on the valve are connected to the controller by an electric cable. The solenoid valves are power operated devices which are used to modify the fluid flow or pressure rate in a process system. It is normally closed if there is no flow across the valve in its resting position with no current on the solenoid contacts. The quick opening of the valves, consisting of a metallic circular disc at right angles to the direction of flow in the pipe, which when rotated on a shaft, seals against the seats in the valve body. Solenoids offer fast and safe switching, high reliability, long service life, good medium compatibility of the materials used, low control power and compact design.

DC motor: Here a 6V DC motor is used. The operating temperature: -10°C ~ +60°C and rated voltage: 6.0VDC.

IN4007: A rectifier diode is used as a one-way check valve. Since these diodes only allow electrical current to flow in one direction, they are used to convert AC power into DC power. When constructing a rectifier, it is important to choose the correct diode for the job; otherwise, the circuit may become damaged. A 1N4007 diode is electrically compatible with other rectifier diodes, and can be used as a replacement for any diode in the 1N400x family. The 1N4007 can sustain a peak repetitive reverse voltage of 1000 volts. When the maximum allowable consistent current amount is flowing through the diode, the voltage differential between the anode and the cathode is 1.1 volts. Under these conditions, a 1N4007 diode will dissipate 3 watts of power (about half of which is waste heat).

TIP120 NPN Epitaxial Darlington Transistor: TIP120 and its equivalent circuit is shown below:

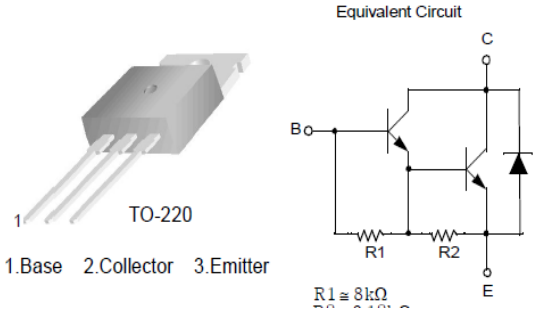

L293D IC : L293D is a dual H-bridge motor driver integrated circuit (IC). Motor drivers act as current amplifiers since they take a low-current control signal and provide a higher-current signal. This higher current signal is used to drive the motors. L293D contains two inbuilt H-bridge driver circuits. In its common mode of operation, two DC motors can be driven simultaneously, both in forward and reverse direction. The L293D IC is shown below:

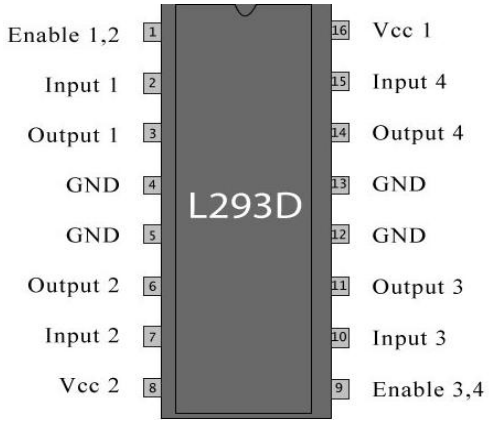

The motors are rotated on the basis of the inputs provided across the input pins as LOGIC 0 or LOGIC 1. In simple words we need to provide Logic 0 or 1 across the input pins for rotating the motor. Lets consider a Motor connected on left side output pins (pin 3,6). For rotating the motor in clockwise direction the input pins has to be provided with Logic 1 and Logic 0.

- Pin 2 = Logic 1 and Pin 7 = Logic 0 Clockwise Direction
- Pin 2= Logic 0 and Pin 7 = Logic 1 Anticlockwise Direction
- Pin 2= Logic 0 and Pin 7 = Logic 0 Idle [No rotation] [Hi-Impedance state]
- Pin 2= Logic 1and Pin 7 = Logic 1 Idle [No rotation]

Water Tank: The same tank is used for supplying water to the field and for fertiliser application when required. Organic fertilisers such as bird and animal manures, blood meal, fish meal, feather meal, ecto and endo mycorrhizae etc can also be used. Organic-based ingredients promote stable consistent plant growth with no growth spikes.

Also connecting wire, resistors, pipe ,M Seal, breadboard etc are used.

Pest control: For pest control, traditional pest control method and electronic pest repellent are preffered.

Connection Diagram: The connection diagram of the proposed system is shown below**:**

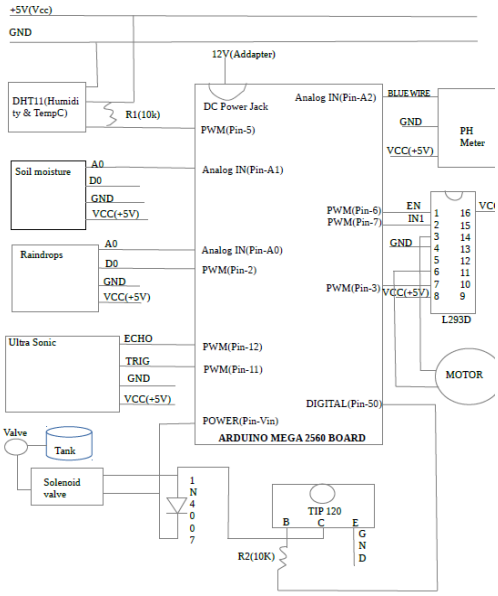

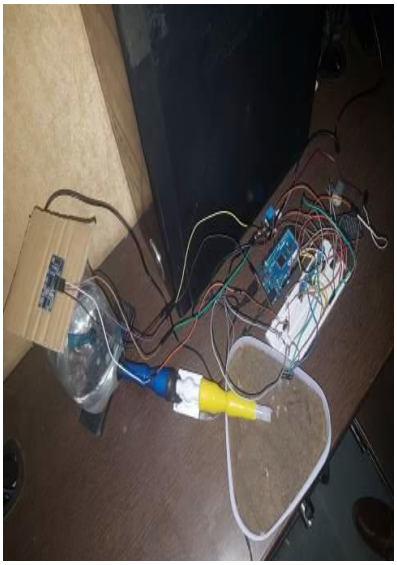

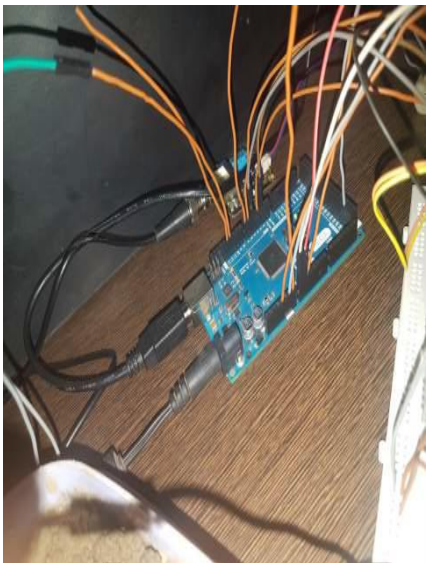

Constraints

However, the state of Meghalaya is facing some of the constraints in development of this fruit sector. These include:

- Inadequate infrastructure for post-harvest management
- Land use and tenure system
- Poor transport infrastructure
- Lack of a robust distribution and marketing infrastructure for horticulture produce
- Lack of well-established processing infrastructure to manage the horticultural produce, etc.
- Supply chain and branding issue.
- Credit availability is also a serious concern.

III. CONCLUSION

Meghalaya is basically an Agricultural State with about 80% of its total population depending entirely on Agriculture for their livelihood.

Stone fruits like Plum, Peach, Pear, Apricot are found in the central plateau of East and West Khasi Hills and Jaintia Hills and have good commercial value. Now by implementing technology, stone fruits can also be grown in other parts of the state. Cultivation of fruits will surely play a vital role in the prosperity of Meghalaya as generally stated that the standard of living of the people can be judged by per capita production and consumption of fruits. Though the initial cost of establishment of an orchard is high but it is compensated by higher productivity or due to high value of produce. In the long term, the technological innovations as envisioned are revolutionary and they will dramatically alter the way tree fruit is produced, handled, and utilized.

REFERENCES

[1] Purnima, S.R.N. Reddy, Department of Electronics & Communication & Computer Science IGIT, GGSIP University, Delhi, India. "Design of Remote Monitoring and Control System with Automatic Irrigation System using GSM-Bluetooth" International Journal of Computer Applications (0975 – 888) Volume 47– No.12, June 2012.

[2] V. Ramya, B. Palaniappan, Boby George, Dept of Computer Science and Engineering Annamalai University Chidambaram, Tamilnadu, India. "Embedded System for Automatic Irrigation of Cardamom Field using Xbee-PRO Technology" International Journal of Computer Applications (0975 – 8887) Volume 53– No.14, September 2012.

[3] K.Nirmal Kumar, R.Prapakaran, Pervasive Computing Technologies, Centre for Convergence Technologies Anna university of Technology, Thiruchirappalli, India." Zigbee Wireless Sensor Network Technology Study for Paddy Crop Field Monitoring" International Conference on VLSI, Communication & Instrumentation (ICVCI) 2011Proceedings published by International Journal of Computer Applications® (IJCA).

[4] B. Sudharsan, R. Mohanasundaram, II-ME-Embedded System Technologies, Tiruchengode, Namakkal, Tamilnadu, India. "Observing And Control Of Agricultural Parameters By Using Wired/Wireless Networking Infrastructure" International Journal of Advanced Research In Technology, ISSN NO: 6602 3127, IJART, Vol. 2 Issue 2, 2012, 170-176.

[5] Kshitij Shinghal, Dr. Arti Noor, Dr. Neelam Srivastava, Dr. Raghuvir Singh, Academic Advisor, Shobhit University, Merrut, India. Department of E&C Engg., Institute of Engineering & Technology, Lucknow, India. "Wireless Sensor Networks In Agriculture: For Potato Farming" International Journal of Engineering Science and Technology Vol. 2(8), 2010, 3955-3963.

[6] G.Gaderer, P. Loschmidt, and A. Mahmood, "A novel approach for flexible wireless automation in real-time environments" in Proc. IEEE Int. WFCS, Dresden, Germany, May 21–23, pp. 81–84, 200.

[7] Natural Capitalism Solutions, prepared for boulder county parks and open spaces by: "Sustainable Agriculture Literature Review". For more www.BouldercCountryOpenSpace.Org, March 2011.

[8] Robert W. Sebesta, "Programming the World Wide Web" Pearson Education, ISBN 978-81-317-2417-0.

[9] Spices Board, Ministry of Commerce and Industry , Government of India, "Cultivation practices for cardamom", January 2009.

[10] Zhang Feng "Research on water-saving irrigation automatic control system based on internet of things" 978-1-4244-8039-5/11/2011 IEEE.

[11] Cheng Wang, Chunjiang Zhao, XinZhang, XiaojunQiao, Yinghua he "Research and exploitation of precise irrigation-fertilization controller" National engineering research center for information technology in agriculture, beijing, china.

[12] Yan Xijun, Lu Limei, XuLizhong "The application of wireless sensor network in the irrigation area-automatic system", International conference on networks security, wireless communications and trusted computing, 2009.

[13] Liang Chen, Jiancheng Shi, Lingmei Jiang "Physically based estimation soil moisture from l-band radiometer" 2008 international workshop on earth observation and remote sensing applications.

[14] Yandong Zhao, Jinfeng Guan, Junfu Zhang, Weilun Yin "Study on precision water-saving irrigation automatic control system by plant physiology" 978-1-4244-2800-7/09/2009 IEEE.

[15] Yandong Zhao " Study on soil water content real-time measuring method and sensor structure" 978-1-4244-2800-7/09/2009 IEEE.

[16] Yunseop (James) Kim, member, IEEE, Robert G. Evans, and William M. Iversen "Remote sensing and control of an irrigation system using a distributed wireless sensor network" IEEE transactions on instrumentation and measurement, vol. 57, no. 7, July 2008.

[17] AlkaKalra, Rajiv Chechi, Dr. Rajesh Khanna "Role of zigbee technology in agriculture sector" ncci 2010 - National conference on computational instrumentation csiochandigarh, india, 19-20 march 2010.

[18] Anonymous , Cardamom in Karnataka. UAS Tech. Series No. 14. University of Agricultural Sciences. Hebbal, Bangalore, p. 5, 1976.

[19] Anonymous, Condiments and spices. In Handbook of Agriculture, ICAR, New Delhi, 1982.

[20] Korikanthimath, V.S. , Shade management for high productivity in cardamom (Elettaria cardamomum Maton). Spice India, 4(2), 15–21, 1991.

[21] Mohanchandran, K, Planting for plantations – a study on cardamom. ISS, IISR, Calicut, Cardamom J, 17(11), pp. 172–176, 1984.

[22] G. K. Banerjee, Rahul Singhal, Bhubaneswar, Orissa India "Micro controller Based Poly house Automation Controller", International Symposium on Electronic System Design, pp.158-162, Dec 2010. [23]. Bhutada, S.; Shetty, S.; Malye, R.; Sharma, V.; Menon, S.;Rama moorthy, R, "Implementation of a fully automated green house using SCADA tool like LabVIEW",International conference on Advanced Intelligent Mechatronics. Proceedings, pp. 741-746, 2005.

[23] Wenbin Huang, Guanglong Wang, Jianglei Lu, FengqiGao, Jianhui Chen "Research of wireless sensor networks for an intelligent measurement system based on ARM", International conference on Mechatronics and Automation Conference on, pp. 1074 - 1079, 2011.

[24] Healy, M. Newe, T. Lewis "Wireless Sensor Node hardware: A review", IEEE 15th International Symposium on Consumer Electronics, pp. 621-624, 2011.

[25] Ahmed, V. , " Innovative cost effective approach fro cell phone based remote controlled embedded system for irrigation", International Conference on Communication Systems and Network Technologies, 2011, pp. 419-144, 2011.

[26]. A.hmed, V. , " Innovative cost effective approach fro cell phone based remote controlled embedded system for irrigation", International Conference on Communication Systems and Network Technologies, 2011, pp. 419-144, 2011.

[27] Vasif Ahmed and Siddharth A. Ladhake; "Design of ultra low cost cell phone based embedded system for irrigation"; IEEE Transactions on Consumer Electronics, 2010 , Vol. 55, No. 2 , pp. 718-721.

[28] I.F. Akyildiz, W. Su, Y. Sankara subramaniam, E.Cayirci , "Wireless sensor networks: a survey", IEEE Transactions on Consumer Electronics, vol. 44, pp. 1291-1297, Aug 2002.

[29] Environmental Engineering and Applications, vol. 50, pp. s255-258, Nov. 2010.

[30] Ma Shuying, Ma Yuquan, Chen Lidong, Liu Shiguang, "Design of a new measurement and control system of CO2 for greenhouse based on fuzzy control", International Conference on Computer and Communication Technologies in agriculture engneering 2010, pp 128-131, May 2008

[31] Automation, 2010, pp. 1012-1014

[32] Yan Xijun, Lu limei, XuLizhong, "The Application of wireless sensor network in the Irrigation Area Automatic System", International Conference on Networks Security, Wireless Communications and Trusted Computing 2009, pp. 21-24.

[33] Allen, R.G.; Pereira, L.S.; Raes, D. and Smith,M. (1998) [16]. "PANSY: a Portable Autonomous Irrigation System" by Benjamin Beckmann and Ajay Gupta Wireless Sensornet(WiSe) Laboratory Department of Computer Science Western Michigan University Kalamazoo, Michigan, 49008-5466, USA [35]. "Wireless Irrigation Pump Safety System (WIPSS)" by Andy Norby, Doug Butler, Nick Butts [18]. "Wireless control of irrigation system operating from zø induction motor fed by 1ø supply" by n. Sandeep and pranava moorthy b.,meenakshi sundararajan engineering college, chennai.

[22]. G. K. Banerjee, Rahul Singhal, Bhubaneswar, Orissa India "Micro controller Based Poly house Automation Controller", International Symposium on Electronic System Design, pp.158-162, Dec 2010. [23]. Bhutada, S.; Shetty, S.; Malye, R.; Sharma, V.; Menon, S.;Rama moorthy, R, "Implementation of a fully automated green house using SCADA tool like LabVIEW",International conference on Advanced Intelligent Mechatronics. Proceedings, pp. 741-746, 2005.

[24]. Wenbin Huang, Guanglong Wang, Jianglei Lu, FengqiGao, Jianhui Chen "Research of wireless sensor networks for an intelligent measurement system based on ARM", International conference on Mechatronics and Automation Conference on, pp. 1074 - 1079, 2011.

[25]. Healy, M. Newe, T. Lewis "Wireless Sensor Node hardware: A review", IEEE 15th International Symposium on Consumer Electronics, pp. 621-624, 2011.

[26] Ahmed, V. , " Innovative cost effective approach fro cell phone based remote controlled embedded system for irrigation", International Conference on Communication Systems and Network Technologies, 2011, pp. 419-144, 2011.

[27]. A.hmed, V. , " Innovative cost effective approach fro cell phone based remote controlled embedded system for irrigation", International Conference on Communication Systems and Network Technologies, 2011, pp. 419-144, 2011.

[28]. Vasif Ahmed and Siddharth A. Ladhake; "Design of ultra low cost cell phone based embedded system for irrigation"; IEEE Transactions on Consumer Electronics, 2010 , Vol. 55, No. 2 , pp. 718-721.

[29]. I.F. Akyildiz, W. Su, Y. Sankara subramaniam, E.Cayirci , "Wireless sensor networks: a survey", IEEE Transactions on Consumer Electronics, vol. 44, pp. 1291-1297, Aug 2002.

[30]. Mahir Dursun, SemihOzden; "A prototype of PC based control of irrigation" International conference on Environmental Engineering and Applications, vol. 50, pp. s255-258, Nov. 2010.

[31]. Ma Shuying, Ma Yuquan, Chen Lidong, Liu Shiguang, "Design of a new measurement and control system of CO2 for greenhouse based on fuzzy control", International Conference on Computer and Communication Technologies in agriculture engneering 2010, pp 128-131, May 2008

[32]. Automation, 2010, pp. 1012-1014

[33]. Yan Xijun, Lu limei, XuLizhong, "The Application of wireless sensor network in the Irrigation Area Automatic System", International Conference on Networks Security, Wireless Communications and Trusted Computing 2009, pp. 21-24.

[34]. Allen, R.G.; Pereira, L.S.; Raes, D. and Smith,M. (1998) [16]. "PANSY: a Portable Autonomous Irrigation System" by Benjamin Beckmann and Ajay Gupta Wireless Sensornet(WiSe) Laboratory Department of Computer Science Western Michigan University Kalamazoo, Michigan, 49008-5466, USA [35]. "Wireless Irrigation Pump Safety System (WIPSS)" by Andy Norby, Doug Butler, Nick Butts [18]. "Wireless control of irrigation system operating from zø induction motor fed by 1ø supply" by n. Sandeep and pranava moorthy b.,meenakshi sundararajan engineering college, chennai.

[36] Datasheet of Arduino mega 2560 and all the sensors mentioned in the paper