A NOVEL APPROACH FOR COST-EFFECTIVE RESOURCE ALLOCATION OF OVERLAY ROUTING RELAY NODES

Ujwala M. Halde[1], Prof. Nilesh R. Wankhade[2]

[1] *Student,* [2]*Head of Department, Computer Department ,LGNSCOE Nashik, India*)

ABSTRACT

Current survey on overlay networks has exposed that user-perceived network performance could be ameliorated by an overlay routing mechanism. In the massive distributed simulation, the way in which constituent parts are interrelated or arranged of the overlay network cant continuously and promptly adjust to route the traffic to reduce the overall traffic cost. Overlay routing has been suggested over the last few years as powerful approach to accomplish definite routing attributes, also going with drawn-out and effortful method of standardization and universal deployment of a new routing protocol. To Develop Internet traffic path over good quality is a commitment to succeed greater-quality streaming, we have proposed Overlay network. Implementing overlay routing needs the placement and maintenance of overlay infrastructure rise to the optimization problems like catch a least group of overlay nodes such that the needed sending the way properties are pleased. It is NP-hard and deduces a nontrivial approximation algorithm for it, where the approximation ratio depends on particular properties of the problem at hand. [1] In this Paper I examine the practical aspects of the scheme by evaluating the gain one can get over several real scenarios.

Index Terms: Overlay routing, Resource Allocation, Network Nodes

I. INTRODUCTION

IN this 21st century, Computer Network has been a rising and necessary model in the IT industries. Computer Network devices that inherit, shows path and transfers data are known as Network Nodes. These Nodes are nothing but host which can Computer, Mobile, Server as well as Networking devices. For transfer-ring Data over Network it mandatory to have well organized Network with proper networking elements links, nodes etc. this arrangement of various elements are also known as Net-work Topology. Dissimilar topologies can cause throughput, however credibility is again and again more worrisome. For making application-specific routing decisions on Overlay Networks query the Overlay routing. The Overlay routing, in turn, acquires and commix topology information from the Overlying Internet. Over-lay network has been suggested for feasible alternate to overcome efficient restrictions of the present system. Overlays are progressively being used to install network services that can-not practically be embedded instantly in the underlying Internet [2, 3]. It was Overlay routing was helpful to get back to its structure TCP functioning over the Internet, where the chief idea is to breach the throughout feedback loop into smaller loops. This needs that nodes capable of performing TCP Piping would be

available along the path at comparatively small distances. Other examples for the use of overlay routing are projects like RON [4] and Detour [5], where overlay routing is used to amend reliability. Yet another example is the idea of the Global-ISP prototype introduced in [6], where an overlay node is used to decrease latency in BGP routing. Now Days, Inter domain routing is controlled by Border Gateway Protocol (BGP).

II. LITERATURE SURVEY

We first introduce some work on Overlay routing has been proved to be a feasible method to improve network performance with unreliable internet infrastructure.

Legion studies have investigated the improvement in overlay routing performance at-tained by deliberate placement of overlay nodes and links [7], [8]. Our work builds on top of the past research by using the fundamental overlay topology as an input to our study. The work in [7] execute a gain-cost analysis similar, by the aim of picking the minimum count of servers and reaching the essential improvement.

Applying overlay routing to formulate net-work performance is motivated by many works that studies the inefficiency of varieties of net-working structure and uses. Assessing a big size of data, explore the question like how good is Internet routing from a handlers viewpoint as round-trip time, packet loss rate, and band-width. This development is due to that we want path that can shortest. When we consider different metrics, e.g bounded delay and affects smaller, and the gain in the many-to-many situation is also important of networking architectures and applications. How good is internet routing from a handlers viewpoint as round-trip time, packet loss rate, and bandwidth? They showed that in 30%-80% of the needed facts, there is another pathway with improved quality compared to the default routing path. RTT strictly affects TCP performance is shown by the author. Thus, breaking a TCP connection into low-latency sub connection expands the whole connections execution. The authors show that in many cases, routing in the internet is inflated besides the real distance of pathway among user is lengthier than least HOP distance.

The native network policies are mainly prompted by economic costs and performance gains [9]. While the concept of using overlay routing to improve routing system was offered in this function, it did not deal with the deployment aspects and the optimization aspect of such organization. The main goal of this organization is to replace the existing routing system, if necessary, using the overlay infrastructure. This work mainly focuses on the overlay organization and it does not assume.

The cost affiliated with the deployment of such system. Here mainly focuses on relay settlement case, in which relay nodes should be laid in an intra-domain network. An overlay path, in this case, there are two shortest path-ways one is from the source to relay node and another is from node to the destination. The objective function in this work is to detect, for all source destination pair, an overlay pathway that is highly split from the defaulting shortest path. This problem is prompted by the request to increase the robustness of the network in case of router failures. They introduce a routing strategy, which replaces the shortest-pathway that routes circulation to an endpoint via predetermined intermediate nodes in order to avoid network congestion under high traffic variability.

Since the main two Considering two main concern, resilient routing and TCP routine, they formulate the intermediate node settlement a san optimization problem, to modify the over-lay routing and suggested several

heuristic algorithms for each application where the objective is to place a given number intermediate nodes in order to optimize the overlay routing and proposed different heuristic algorithms for each application Following this line of work, the resource distribution problem in this paper as a general framework that is not tied to a specific application, however can be used by any overlay system. Besides, different experimental algorithms, the estimate settlement algorithm existing work, catching any overlay system, certify that the placement charge is confined inside the algorithm estimate ratio. Node placement problems have been considered before in different contexts in many works, considering web cache and web server settlement .overlay node settlement is basically dissimilar from these settlement problems where the objective is to develop the routing using a different routing system rather than pushing the content close to the clients.

2.1.Analysis of Existing Systems

Several works are studied which are use to enhance routing and network performance using overlay routing. The routing ineffectiveness in the Internet and used an overlay routing in order to assess and study experimental methods improving the network over the real environment is studied by the authors. While the concept of using overlay routing 5 to improve routing scheme was studied in this work, it did not deal with the deployment features and the optimization features of such infrastructure. A resilient overlay network (RON), which is architecture for application-layer overlay routing to be used overcoming the present Internet routing infrastructure, has been studied. Similar to our work, the chief goal of this architecture is to substitute the existing routing scheme, if required, using the overlay infrastructure. This work mainly focus on the overlay infrastructure (monitoring and detecting routing problems, and maintaining the overlay system), and it does not conceive the cost related with the deployment of such system.

2.2.Disadvantages Of Existing System

It is use to develop a significant estimate In order to deploy overlay routing over the particular physical infrastructure, one has to deploy and manage overlay nodes that may have the new further practicality. This comes with a non negligible price each in terms of capital and operative costs. Our proposed algorithmic framework that may be employed in order to deal with efficient resource allocation in overlay routing.[6]

III. PROPOSED SYSTEM

In this paper, we propose the minimum number of infrastructure nodes that need to be added in order to sustain an exact attributes in the overlay routing. In the shortest-path routing over the Internet BGP-based routing example, this question is planned to: Whatever is the least quantity of relay nodes that are required in order to make the routing within a groups of autonomous systems (ASs) use the basic shortest pathway between them? In the TCP structure plus verifies its assets.

performance example, this may interpret to: What is the minimum number of relay nodes needed in order to make sure that for each TCP connection, there is a pathway among the connection destination for which every predefined round-trip time (RTT), there is an overlay node capable of TCP Piping. Overlay Routing Resource Allocation (ORRA) problem is de-fined as a general optimization problem and its complexity is studied in our proposed system. The study shows that the problem is NP-hard, and we existing nontrivial estimate algorithm

for it.

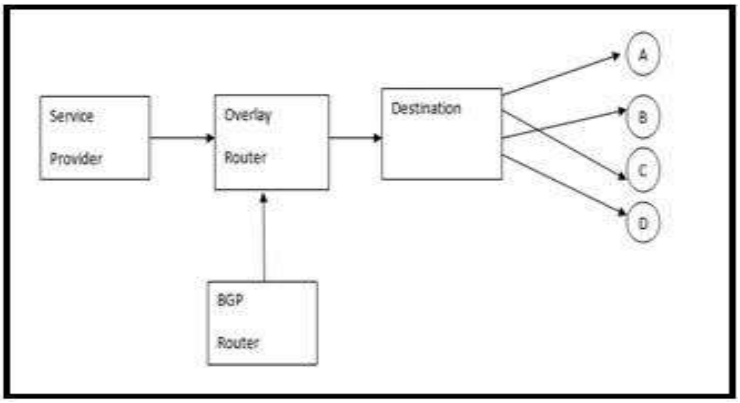

It also offers Normal algorithmic context that can be custom in demand to contract with well-organized store provision in overlay routing. We are only involved in cultivating routing characteristic among a single source node and a single destination, then the problem is not complicated, and result the ideal quantity of nodes develops trivial since the potential candidate for overlay placement is small, and in general any assignment would be good.

Though, when we study one-to-many or many-to-many states, then a single overlay node may affect the pathway attributes of many paths, and thus selecting the finest sites be-comes much fewer trivial.

3.1.ORRA Algorithm

This Algorithm for Find minimum distance path to place overlay node

Algorithm ORRA (G=(V,E),W,P_u, P_o, U)

1. $\forall$u $\in$ V/U, if w(u) =0 then U$\leftarrow$ v .
2. If U is feasible Solution returns U.
3. Find a pair $(s,t) \in$ Q not covered by U.
4. Find a (minimal) Overlay Vertex Cut V$'$(V$'\cap$U=ϕ)with respect to(s,t).
5. $set \in = \min_v \in V' w(u)$
6. set $w1(u) = \begin{cases} \in & v \in V' \\ 0 & \text{Otherwise} \end{cases}$
7. $\forall$u set w2(u)=w2(u)-w1(v)
8. ORRA (G,W_2, P_u, P_o, U).
9. $\forall$u $\in$U if U\ u is a feasible solution then set U=U\ u
10. Returns U

3.2.Load Balancing Algorithm

This algorithm balances the load of overlay node.

```
h = hash call-id
look up session in active table
if not found
   /* don't know this session */
   if INVITE
      /* new session */
      select one node d using algorithm
      (TLWL, TJSQ, RR, Hash, etc)
      add entry (s,d,ts) to active table
      s = STATUS_INV
      node_counter[d] += w_inv
   /* non-invites omitted for clarity */
else /* this is an existing session */
   if 200 response for INVITE
      s = STATUS_INV_200
      record response time for INVITE
      node_counter[d] -= w_inv
   else if ACK request
      s = STATUS_ACK
   else if BYE request
      s = STATUS_BYE
      node_counter[d] += w_bye
   else if 200 response for BYE
      s = STATUS_BYE_200
      record response time for BYE
      node_counter[d] -= w_bye
      move entry to expired table
/* end session lookup check */
if request (INVITE , BYE etc.)
   forward to d
else if response (200/100/180/481)
   forward to client
```

IV. PERFORMANCE OVERVIEW

Latency optimized pathways to overlay users are offered by a type of Service overlay network routing. A logical view of the overlay network is nothing but an Overlay routing, which up-holds a separate routing table, not a native routing table. In our work, the objective of overlay routing is to minimize the total latency of overlay route paths.

4.1.AS-level BGP routing

BGP is a policy-based inter domain routing protocol that is used to determine the routing paths between autonomous systems in the Internet [4]. As we study the aim to search least quantity of relay node locations that can allow shortest pathway routing among the start point to endpoint pairs in AS-level BGP routing. Evoke that routing in BGP is policy-based and depends on the business relationship between peering ASs, and as a result, a significant segment of the pathway in the Internet don't drive alongside shortest path, which is known as path inflation. We study a one-to-many situation wherever we need to improve routing among a single start point and many endpoints. In this routing algorithm is more important in many to many system there is least overlap between shortest pathway and there is not much evolution can done over a basic desirous method.

We determine, using real up-to-date Inter-net data, that the algorithm can propose a somewhat minor group of relay nodes that can suggestively decrease latency in current BGP routing.

4.2.TPC level improvement

The Transaction Processing Performance Council (TPC), an Engineering Principles body de-voted to the improvement and broadcasting of database, As we study the TPC level enhancement in the wireless networks as clarified in the AS-level BGP routing part. To improve TCP performance using overlay routing has been

studied in many works in past few works [5], [6]. In TPC level improvement, we check our planned algorithm on a synthetic random graph, and we show that the overall outline can be useful also to this case, subsequent in very close to optimal outcomes.

4.3.Voice-over-IP

Several VoIP facilities deal structures plus ser-vices that are not offered with an outmoded receiver, or are offered but only for an extra charge. Voice-Over-IP kinds of uses are suitable. increasingly widespread present IP telephone facilities without any cost, but they want a limited endwise interruption (or latency) among some couple of handlers to keep a realistic facility. We express that our system can be important to select a least hubs, however developing working flow for many users.

V. CONCLUSION

In the present study, we evaluated the proposed method of finding minimal number of infrastructure nodes that need to be extra so as to keep exact attributes in the overlay routing. In the shortest-path routing over the Internet BGP-based routing, we are also emphasizing on general algorithmic framework that can be used in order to deal with effective resource allocation in overlay routing. Generated optimization problem are studied deeply in this paper. We show that it is NP-hard and develop a nontrivial estimate algorithm for it, where the approximation ratio depends on particular properties of the problem. We look at the practical aspects of the scheme by evaluating the gain one can get over several real scenarios like BGP routing, TPC level and Voice-over-IP.

VI. ACKNOWLEDGMENT

First and foremost, I would like to thank my guide Prof. N.R.Wankhade, for his guidance and support. I will forever remain grateful for the constant support and guidance extended by guide, in making this report. Through our many discussions, he helped me to form and solidify ideas. The invaluable discussions I had with him, the penetrating questions he has put to me and the constant motivation, has all led to the development of this seminar. I wish to express my sincere thanks to the Head of department, Prof. N.R.Wankhade also grateful thanks to the departmental staff members for their support. I wish to ex-press my sincere thanks to the PG Coordinator Prof. Ms. J.V.Shinde. I would also like to thank to my friends for listening to my ideas, asking questions and providing feedback and suggestions for improving my ideas.

REFERENCES

[1] Rami Cohen and Danny Raz, Member, IEEE "Cost-Effective Resource Allocation of Overlay Routing Relay Nodes"-IEEE/ACM TRANSACTIONS ON NETWORKING, VOL. 22, NO. 2, APRIL 2014

[2] National Research Council. "Looking Over the Fence at Networks." National Academy Press,Washington D.C., 2001.

[3] L. Peterson, T. Anderson, D. Culler, and T. Roscoe. "A Blueprint for Introducing Disruptive Technology into the Internet." In Proceedings of the HotNets-I, 2002.

[4] D. Andersen, H. Balakrishnan, F. Kaashoek, and R. Morris, "Resilient overlay networks," in Proc. 18th ACM SOSP, 2001, pp. 131145.

[5] S. Savage, T. A. A. Aggarawl, T. Anderson, A. Aggarwal, D. Becker, N. Cardwell, A. Collins, E. Hoffman, J. Snell, A. Vahdat, G. Voelker, and J. Zahorjan, "Detour: A case for informed internet routing and transport," IEEE Micro, vol. 19, no. 1, pp. 5059, Jan.Feb. 1999.

[6] R. Cohen and A. Shochot, "The "global-ISP" paradigm," Comput. Netw., vol. 51, no. 8, pp. 19081921, 2007.

[7] S. Shi and J. Turner, "Placing Servers in Overlay Networks, SPECTS, July 2002.

[8] Z. Li and P. Mohapatra, "The Impact of Topology on Over-lay Routing Service," in Proceedings of IEEE INFOCOM, March 2004.

[9] W. B. Norton, "A Business Case for ISP Peering," White Paper, http://www.equinix.com, February 2002.