DESIGN OF ENVIRONMENTAL MONITORING APPLICATIONS SYSTEM USING TEMPERATURE SENSOR AND ZIGBEE

[1]Mr. Manohar G R, [2]Dr.M Nagaraja, [3]Dr. M Z Kurian

[1,2] Dept. of ECE, [3]HOD,
Sri Siddhartha Institute of Technology, Tumakur Karnataka, (India)

ABSTRACT

Wireless sensor network technology has been emerging as a violable solution to many innovative applications like industry, science, transport, civil industry, agriculture and security. A wireless sensor network system that is developed using open source hardware platform called Raspberry pi. The system is low cost and highly scalable both in terms of type of sensors and number of sensor node, which makes it well suited for a wide variety of applications related to environmental monitoring. The design of ZigBee Protocol is investigated using XBee module to establish WSN. A brief introduction to wireless sensor network(WSN) and temperature sensor briefing their characteristics and their applications, wireless crop management in agriculture. Monitoring agricultural environment for various factors such as soil moisture, temperature and humidity along with other factors can be of significance. A temperature sensor designed for weather monitoring applications.

Index Terms: WSN, Environmental Monitoring Raspberry Pi, Zigbee, Temperature Sensor.

I .INTRODUCTION

1.1 Wireless Sensor Networks (WSN)

Wireless Sensor Networks is a system in which there is 1 to N number of spatially distributed modules called sensor nodes which are used to sense different physical parameters like temperature, pressure and moisture. The data sensed by sensors is sent to the base station using wireless communication standards like ZigBee. From past many years it is been a favorite area of research of many researches in which we have witnessed different waves of development. As the Wireless Sensor Network system has seen many technological advances, it has become a novel solution for many real life challenges. Because of its simple structure and ease of handling and understanding WSN technology is the most popular technology nowadays which is being used in many applications like military, structural health monitoring , environmental monitoring, and auto mobile etc.

Fig 1.1 Architecture of Wireless Sensor Networks

WSN is a network consisting of numerous sensor nodes with sensing, wireless communications and computing capabilities. These sensor nodes are scattered in an unattended environment(i.e. sensing field) to sense the physical world. The sensed data can be collected by a few sink nodes which have accesses to infrastructured networks like the Internet where the sensor nodes distributed all over the network for data acquisition. The network will have a main node (coordinator) that control operation of all child nodes. The distributed nodes can be connected in different formats called topology it may be ring, mesh, star and bus topology can communicate each other. The collected data is sent to the end device wirelessly.

1.2 Characteristics of WSN:

Important characteristics of Wireless Sensor Networks Include

- Wireless transmission
- Consists of 1 to thousands of nodes
- Serial data communication
- Low power consuming
- Small size and low cost
- Different connecting topologies
- Prone to failures
- Mobility of nodes
- Easy to use
- Scalability to large number of nodes

1.3 Wireless crop management in agriculture

The crop management in agriculture is an emerging trend from past few years. Since the rainfall in India is uneven and irregular, most of the farmers are migrating to irrigation systems. The percentage of formers depending on irrigation system is increasing gradually over one decade. The basic concept of irrigation system is based on having a main reservoir and distributing the water to the crops using pipes or sprinkler system.

As the irrigation technology got developed, intensive researches enabled many advanced features in irrigation. Wireless control of irrigation is one such advancement. Wireless irrigation control includes monitoring the crops and controlling them remotely. The soil parameters like temperature, humidity and moisture are measured

using respective sensors which are embedded in a microcontroller and sent to the base station using wireless transceivers like motes.

Data transmission uses wireless communication standards like ZigBee. At the base station there will be another microcontroller which is programmed to control whole system. The data from sensor nodes is received at the base station using wireless transceiver and sent to microcontroller, this microcontroller analyze the received from the sensor node that contain the information about soil parameters and compares them with the pre defined values. After comparing with the predefined values the microcontroller will take necessary actions according to the program. The necessary actions include turning on/off of the motor, sending the message to the concerned authority and controlling sprinklers. A control application is also developed to control the system remotely from any part of the world. The web interface is developed for remote online monitoring and maintenance of the system. The sensor nodes are deployed in the field separated by certain distance between each other and supply will be given through battery.

Base station will have a microcontroller, GSM module and interfaced with many peripherals like monitor, keyboard, LCD display, relay and solenoid valve. Data base application can also be implemented using different tools like Relational Data Base Management System(RDBMS) and can be utilized to plot graphs showing the variation of climatic parameters like temperature and moisture. Many microcontrollers like 8051, Cortex, Arduino have been used for implementation. Transceivers include XBee modules from Digi International and Motes. Most of the existing systems have been implemented using sensor network research platforms such as Cross Bow (now MEMSIC) motes and Tiny OS software framework.

II RELATED WORK

Sheikh Ferdoush , Xinrong Li, "Wireless Sensor Network System Design using Raspberry Pi and arduino for Environmental Monitoring Applications" [1].

This paper represent design of wireless sensor network is developed using open source hardware platform called Raspberry Pi .This system is low cost and scalable in terms of sensor types and the number of sensor nodes. The 802.15.4 RF transceivers and zigbee protocol modules are used for wireless sensing, actuation system and capable of forming a complex mesh network structure on its own without intervention from user applications program running on the microcontroller. A brief description of sensors network and cyber physical system has focused on the development of enabling the technologies by addressing a lot of technical challenges such as multi hop routing, communication abstractions and operating system(OS),semantic abstractions and storing of data.

Nattapol kaewmard ,SaiymenSaiyod," Sensor Data Collection and Irrigation Control on Vegetable Crop using Smart Phone"[2]. The main purpose of this paper is to find a better way controlling an irrigation system with automatic system manual control by smart phone and provide long term sustainable solution for automation of agriculture.

Agricultural automation has several methods to getting data from vegetable crop like sensor for environmental measurement and developed portable measurement technology it includes sensors like soil moisture sensor, air

humidity sensors, and air temperature sensors, for collecting different environmental data. The smart forming technique are used for environmental measurements and water management is that it is important plant growth . In addition ,environmental measurement using wireless sensor network and water management technology are simpler, cheaper and low cost.

However measured and collected environment data from sensor to manage vegetable crop including water level, air temperature and air humidity were not enough for making the intelligence decision.

G. V. Satyanarayana ,SD. Mazaruddin [3] proposed a design to implement remote monitoring of agriculture system. ZigBee is used for wireless communication. Environmental parameters like temperature, moisture and humidity is measured with this design. This system also has a GPS system to identify the location of field. Solar power is selected to address the power constraints. CC2430 chips are used for ZigBee standard. The system uses Samsung S3C2440 based on ARM 920T core at Central Monitoring Station which supports embedded operating systems like Linux, VxWorks. This design includes SIM100-E GSM/GPRS module for messages transmission. Web data server is used for accessing the information about climate variations. At the end user point service program has written to access servers to obtain latest data from anywhere over the world. The implemented system is tested in 800square meters field. They have also implemented GUI application to allow the uses to access the data and configure the system and track the location of the farm field using GPS system.

Yiming Zhou @.al., "A Wireless Design of Low Cost Irrigation System using ZigBee Technology"[4] . In irrigation system instead of using conventional wired system, the wireless design made the system easy installation and maintenance using wireless sensor or actuator node and portable controller, acting as the end device and coordinator in zigbee WSN respectively, which reduces labour saving and water saving in irrigation. This system consist of portable controller, a wireless sensor node, a weather station and wireless actuators. The sensor node collects the temperature and air humidity parameters, whereas the nearby weather station monitors the information, a portable controller it gets the sensor data and actuator node are used to control the pump and electromagnetic valves, these sensor node and actuator node senses a end devices.

Goran Horvatet @.al., "Real time WSN Communication for Access Control Applications"[5]. In this paper the analysis of WSN real time QOS ability for the application of access control communication network was presented in respect to the existing WSN based on ZigBee communication protocol andXBee WSN module.

These WSN transmit the data and return the acknowledge and rating QOS matrices was proposed based on round trip time (RTT) parameter and various other parameter, the distance between end node and cluster head is analyzed in XBee WSN modules.

Jonathan Jao, Bo Sun and Kui Wu [6] have proposed a design to implement Wireless Sensor Network for precision agriculture. The design is based on using motes transceiver for communication, MDA300CA board for data acquisition purpose and EC-5 soil moisture sensor to sense the moisture content in the soil. They have selected open source embedded operating system software TinyOS 2.1.1 and MViz for development of application. Since power consumption is major concern they have used solar panels and rechargeable battery as power source. The transmission modules used are CC2420 which uses ZigBee 802.15.4 wireless communication standard. They have designed and implemented using Oracles's Virtual Box. SolMaxx OEM rated at 2V and 200mA solar penal provides sufficient power to battery to recharge. Testing the design includes single node experiment and multi node experiment. This research illustrates how to interface external sensors to Micaz

through MDA300CA and have presented the driver and environment which is publicly available which mainly concentrates on research areas of TinyOS. The outcome of this work is to detect the moisture content of the soil and show it is being varied with different water saturation.

S.S Patil and V.M Davande [7] have proposed a design to implement Wireless Sensor Network (WSN) to monitor environmental conditions. This design is also based on ZigBee. The sensor nodes consist of microcontroller connected with temperature (LM35), water level (WL400), humidity (SH220) and soil moisture sensors. The design uses 89S52 microcontroller which id of 256x8 bit RAM. The sensors are connected to microcontroller via Analog to Digital Converter (ADC). For software implementation Embedded C programming language is used. In order to implement Graphical User Interface, they have used Visual Basic 6.0 to enable the used to interact with the system. Finally the design is tested in 800sq meter land with 6 sensor nodes and a master node. The design presented enables the user to use less human effort and control the system accurately.

III SYSTEM DESIGN

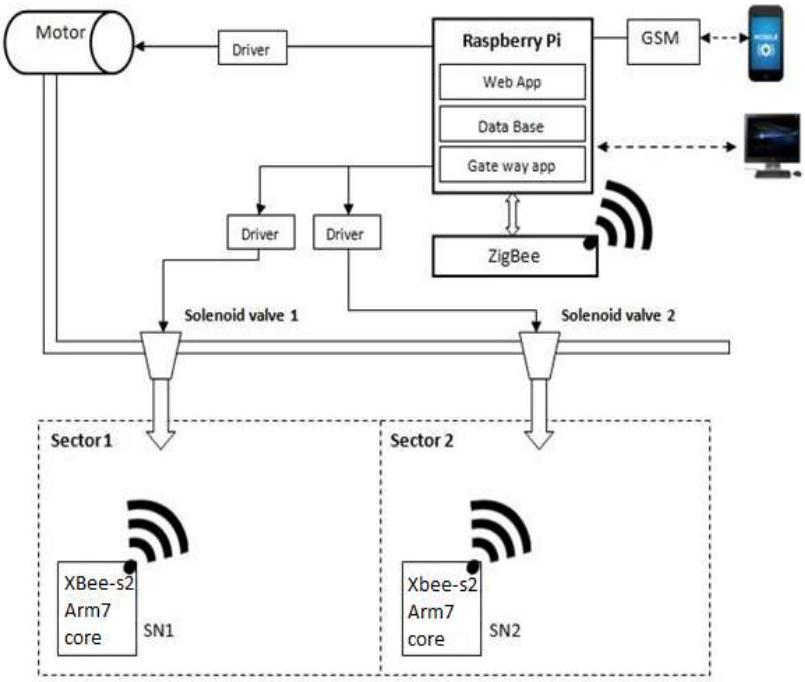

Fig.2: The block diagram of the proposed system

IV.SYSTEM IMPLEMENTATION

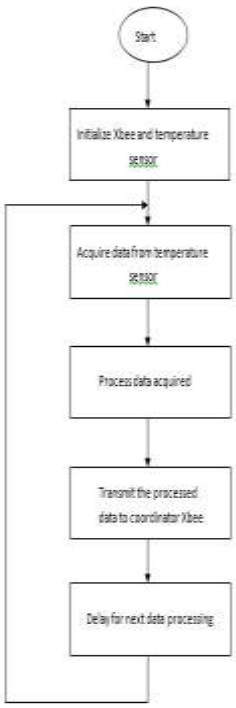

Fig.3: Router Node flow diagram

4.1 Raspberry Pi

The Raspberry Pi is a series of credit card–sized single-board computers developed in England, United Kingdom by the Raspberry Pi Foundation, All Raspberry Pis include the same VideoCore IV GPU, and either a single-core ARMv6-compatible CPU or a newer ARMv7-compatible quad-core one and 1 GB of RAM (in Pi 2), 512 MB (in Pi 1 models B and B+), or 256 MB (in models A and A+, and in the older model B). They have a Secure Digital (SDHC) slot (models A and B) or a MicroSDHC one (models A+, B+, and Pi 2) for boot media and persistent storage. In 2014, the Raspberry Pi Foundation launched the *Compute Module*, for use as a part of embedded systems for the same compute power as the original Pi. In early February 2015, the next-generation Raspberry Pi, Raspberry Pi 2, was released.[s] That new computer board is initially available only in one configuration (model B) and has a quad-core ARM Cortex-A7 CPU and 1 GB of RAM with remaining specifications being similar to those of the previous generation model B+.

4.2 Zigbee

ZigBee is a standard for a suite of high level communication protocols based on the IEEE 802.15.4 standard for low power and low data rate radio communications. Zigbee is initiated and maintained by the XCTU software. The typical application areas of Zigbee include

5 Smart energy monitoring;

6 Health care monitoring;

7 Remote control;

8 Building automation and home automation.

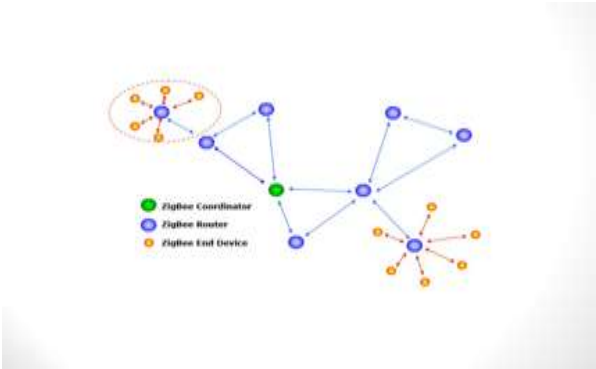

Fig.4: ZigBee Network

4.3 Sensors

A sensor is a hardware device that produces a measurable response signal to a change in a physical condition such as temperature, pressure and humidity. The continual analog signal sensed by the sensors is digitized by an analog-to-digital converter and sent to the embedded

processor for further processing. Because a sensor node is a micro-electronic device poweredby a limited power source, the attached sensors should also be small in size and consume extremely low energy. A sensor node can have one or several types of sensors integrated in or connected to the node.

4.4 Temperature Sensor

The LM35can measure temperature more accurately than a using a thermostat. The sensor circuitry is sealed and not subject to oxidation, etc. The LM35 generates a higher output voltage than thermocouples and may not require that the output voltage be amplified. Here is a commonly used circuit. In this circuit, parameter values commonly used are:

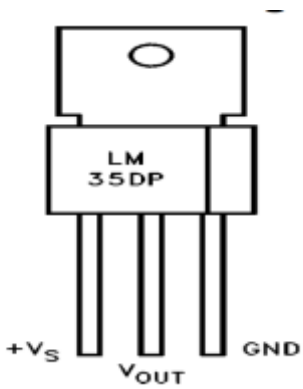

Fig.5: Temperature Sensor (LM35)

V_c = 4 to 30v,5v or 12 v are typical values used.

$R_a = V_c / 10^{-6}$ it can range from 80 KW to 600 KW but most just use 80 KW.

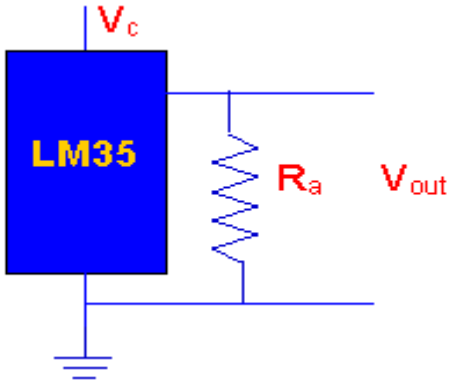

Fig.6: Circuit diagram of temperature sensor

4.5 XBee S2

The XBee uses 3.3V and has a smaller pin spacing than most breadboards/proto boards. XBee is a microcontroller made by digi which uses the Zigbee protocol.

Based on IEEE 802.15.4 Standard

- 802.15.4/Multipoint network topologies
- 2.4 GHz for worldwide deployment
- 900 MHz for long-range deployment
- Low-power sleep modes
- Multiple antenna options
- Low power and long range deployment
- Low Power Consumption
- Low Data Rate

V.RESULT

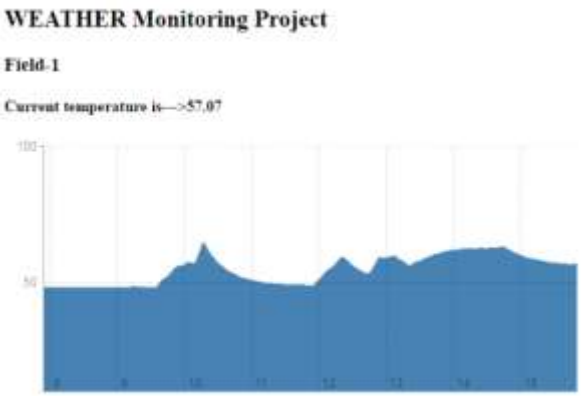

We have designed a temperature sensor, that is continuously monitoring temperature in environment with respect to time. If temperature value more than threshold it will send warning message to concerned authority people.

VI CONCLUSION

Wireless sensor network is becoming a popular technology prevalent in most of the applications of various different areas.

This paper presented a design and implementation of various sensors like temperature sensor and XBee module in wireless sensor networks for environmental applications. Data sensed from temperature sensor is transmitted to XBee Router and then XBee coordinator to Raspberry Pi.

REFERENCES

[1]. Sheikh Ferdoush, Xinrong Li,"Wireless Sensor Network System Design using Raspberry Pi and Arduino for Environmental Monitoring Applications,"ELSEVIER 2014.

[2]. Nattapol Kaewmard, saiyan Saiyod,"Sensor Data collection and Irrigation Control on Vegetable Crop using Smart Phone and wireless Sensor Networks for Smart Farm,"IEEE 2014.

[3]. G.V. Satyanarayana and SD. Mazaruddin, "Wireless Sensor based Remote Monitoring System for Agriculture using ZigBee," Conference on Advances in Communication and Control System,may 2013.

[4]. Yiming Zhou, Xianglong Yang,Liren Wang, Yibin Ying ,2009 International Conference on network security Wireless communications and Trusted computing ,IEEE 2009.

[5]. Goran horvat, Zoran Balkic and Drago Zagar, "Real time WSN communication for access control applications," IEEE 2013.

[6]. Ali Akbar Siddique, Samreen Amir and Nimrah Ahmed,"Web based online parameters monitoring and control systems implemented on Raspberry Pi," First international conference on MCCT FEB 2014.

[7]. Jonathan Jao, Bo Sun and Kui Wu, "A Resultant paper on Precision Agriculture in WSN using grid based deployment ," International Journal of Computer Science and Engineering Technology(IJSCE), July 2013.

[8]. S.S Patil and V.M Davande,"Smart Wireless Sensor Network for Monitoring an agricultural Environment," International Journal of Computer Science and Information Technology(IJEST),2014.