REAL TIME OBJECT TRACKING BY ROBOT USING KALMAN FILTER

Hamsa.D[1], Reshma Verma[2], Shivaram.K.R[3]

[1,2]ECE, MSRIT, (India)

[3](Co founder of Skobotics)

ABSTRACT

Tracking of the object has several applications in video surveillance. Most of the research work works offline. Robotics is playing main role for many real time tracking system. Combination of object tracking with robotics is able to track objects real time. In this paper we present for real time tracking of objects by robot using Kalman filter. For the robust tracking of an object the main challenges includes object shape, variation and color and scene variation. Prediction of the target object's location and representation are two aspects. In present paper this can be obtained by using Kalman filter algorithm. Firstly object detection is achieved by detecting the color of the image. This can be achieved by converting the RGB colored image to a HSV image. Once an image is converted, we use color mask to take pixels which have only a particular color and find the continuous region where these colors are present then find the center of the region. Secondly shape of the object is detected by using Arc length algorithm. Then after object detection tracking of an object is achieved by considering centre of the pattern into consideration in all axis. Kalman filter is used it is Robustness to noise and to track an object more precisely. Real time object tracking is achieved by using a camera on Robot.

Keywords: Object Tracking, Raspberry Pi, Real Time Tracking, Kalman Filter.

I. INTRODUCTION

In the world of science and technology, Robotics has numerous applications which are most important in present days. Robotics is the branch of electrical engineering, mechanical and engineering computer science which deals with design, construction, operation, application of robots and computer systems are for control, feedback, and processing the information. A robot is defined as a mechanical or artificial agent, the machines guided by a computer program or electronic circuitry. Nowadays robots are used in wide range of applications starting from common civilian usage to defense applications. This project will address the issue of an object tracking by low cost robot using kalman filter. Object tracking is defined as locating an object in the actual time during which a process or event occurs. We track an object with a given pattern by keeping it in the center of our view. The color and pattern of the object can be changed in the program. X-axis is tracked by moving robot left and right. Z-axis is tracked by moving robot front and back. Y-axis is tracked by moving camera up and down. In all the tracking we use Kalman filter to estimate the next position of the center of the pattern and area of the pattern. In this the Raspberry Pi is placed on the Robot where the several codes are written in to the raspberry pi using Python language. There are various raspberry pi models, this is project is implemented by using Raspberry pi 3

model Raspberry Pi is an ARM based credit card sized Single Board Computer. Here the codes for tracking an object is written using Kalman filter algorithm in Python language into the Raspberry pi.

Python language is a general purpose, high-level, interpreted, dynamic programing language. Its design emphasizes code readabilit. Its syntax allows programmers to express concepts in fewer lines of codes which is not possible in languages such as C, C++ and many other programming languages. Kalman filter algorithm is used for tracking an object here. Kalman filter is used because it is robust against noise where as others like machine learning, PID, PDetc are not robust against noise.Kalman filter is used to make the tacking smooth.

II. PROPOSED WORK

In this paper, the proposed work is to track an object in real time by Robot using Kalman filter. Here Raspberry Pi is used for communication between the robot and the object which has to be tracked.

RASPBERRY PI:

The Raspberry Pi is of credit card size which is single board computer, and it is developed in England, United Kingdom. Raspberry Pi 2 model is used in this paper. The main specifications of this are: SOC is BROADCOM BCM2836, CPU is of 900MHz quad core ARM Cortex-A7, Memory is of 1GB, there are 4 USB ports, Power ratings is of 600mA, Power source – 5V. The size and weight of the is 85.60 mm × 56.5 mm (3.370 in × 2.224 in) and 45g (1.6oz) respectively.

1. REAL TIME OBJECT LOCATING SYSTEMS:

Real-time object locating systems are also known as object tracking systems, these are used to identify and track the location of objects or people in real time usually with in a building. In wireless tags are attached to objects or worn by the people and in most those tags are found by the tracking system. Here tracking systems are nothing but the Robots. And that tag can be of different shapes and filled with colors. By identifying the colors and shapes of the tags the Robot tracks the objects. The physical layer of technology is usually formed of radio frequency communication. This are the form of local positioning system, and they do not usually refer to GPS, mobile phone tracking. Location information of an object or people does not include direction, speed or spatial orientation methods are used to determine location are Angle of Arrival(AoA), Line of Sight(LoS), Time of arrival(ToA), Time difference of arrival (TdoA), Time of Flight (ToF), Two-way ranging (TWR).

III. KALMAN FILTER

Kalman Filter is a linear quadratic estimate [LQE]. It is an algorithm which uses series of measurements observed over time which contains statistical noise and inaccuracies and produces the estimates of unknown variables. Algorithm works in two steps: they are Prediction and Estimation. Calculation steps of Kalman filter are:

- Let the initial state be x_{init}. And the value of the predicted state estimate x_p initially be $x_p(0)$. This value is equal to the initial value and it is given as $x_p(0) = x_{int}$
- Now predicted measurement estimate is calculated from the predicted state estimate. Predicted measurement estimate$y_p(k) = g[x_p(k)]$.

- Innovation variable is estimate error and is defined as the difference between the measurement and the predicted measurement and is given by: $e(k) = y(k) - y_p(k)$
- Then by adding the corrective term to predicted state, the corrected state estimate is calculated and the corrected state estimate is given by: $x_e(k) + ke(k)$
- Finally predicted state estimate is calculated for the next step and is given by:

$$x(k+1) = f[x_c(k), U(k)]$$

- The corrected state is the corrected state estimate $x_c(k)$

Block Diagrams: Hardware Block Diagram

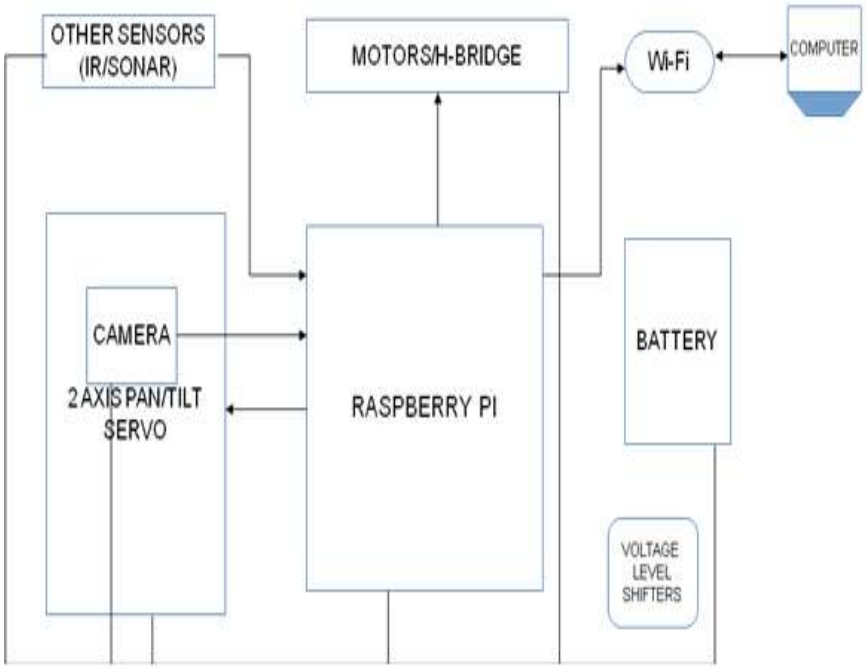

The above figure shows the hardware block diagram of the real time object tracking. In this ,it consists of camera,sensonrs,raspberry pi,battery,voltage level shifter and wifi dongle. The camera is mounted on two axis panntilt servo. The videos which are captured are senty to the raspberry pi. Here servo motor is used because it is a rotatory linear actuator that which allows for precise control of angular or linear acceleration,position and velocity. Servo motors are high in efficiency. These are controlled by sending an electrical pulse of variable width or PWM. Motors H- Bridge is used because this enables a voltage to be applied a load in either direction.

Software Block Diagram:

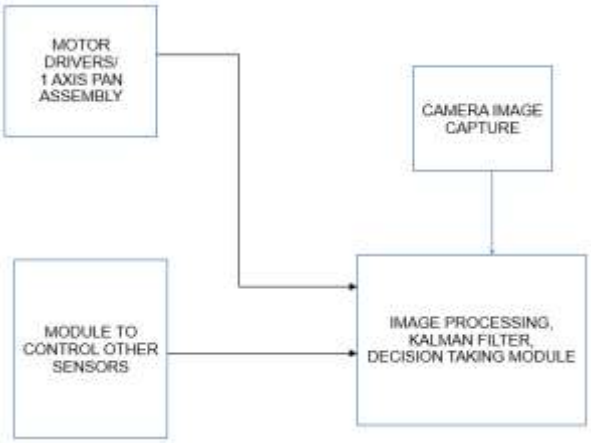

Fig (A) : Software Block Daigram (Client)

The figure(a) shows the sofware block diagram. In Software block diagram there are both client and serve. Here raspberry pi behaves as client and computer behaves as server. In server the position of the Robot, feature,pattern,color and shape of the object is determined and final decision is taken by using kalman filter algorithm. Once the decision is made by the kalman filter algorithm it isn to the raspberry pi through wifi.The position of the robot is done by placing the objects namely P,Q,R,S and name the coordinates for them. By knowing the coordinates of the objects which are palced near the Robot can easily calculate the position of the Robot. For object tracking,object recognition should be done first.

IV. OBJECT TRACKING

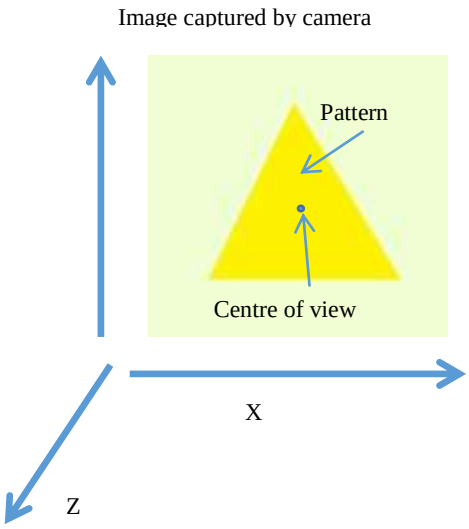

Fig (): Image Captured by a Camera

4.1 Object Tracking in all Axis

We track the object with a given pattern by keeping it in the center of our view. The color and pattern of the object can be changed in the program. X-axis is tracked by moving robot left and right. Z-axis is tracked by

moving robot front and back. Y-axis is tracked by moving camera up and down. In all the tracking we use Kalman filter to estimate the next position of the center of the pattern and area of the pattern.

X-axis tracking:

We use dc motors to track along X-axis. Robot turns left if the center of pattern is towards left of the center of camera view. Similarly robot turns right if the center of pattern is to the right of the camera view. To turn left we turn right wheel forward and left wheel backward. To turn right we turn left wheel forward and right wheel backward.

Y axis tracking

We use servo motor to track Y-axis. We use Hi-Tech HS-422 servo motor which is more than enough torque and speed for our task. It uses 50 Hz signal with 0.65ms on time to turn -90 degree and 2.5ms on time for +90 degree turning. This corresponds to 3% duty cycle for -90 degree and 13% duty cycle for +90 turning.

Z-Axis Tracking:

We track Z-axis by moving the robot forward and backward. The area of the pattern tells us how far the pattern is from the robot. If the pattern has smaller area robot moves forward to increase the area of the pattern in the image captured, Using the same logic robot goes backward if the area of the pattern is bigger that a threshold

4.2 Color Detection:

It is the ability of machine or any organism to differentiate between the object based on the frequencies of the light they emit, transmit or reflect. Colors can be measured and verified in various ways. In this object tracking firstly color detection is to be done. For color detection the below steps should be followed:

Convert the image from RGB to HSV:

In HSV, H stands for Hue (color), S stands for saturation (how much of the color), V stands for value (how much white is present) and RGB stands for Red, Green, Blue in which all are colors.it is much difficult to detect a color in an image by using RGB colors. So, firstly an image is converted to HSV then color of an image is detected. The process of converting an image from RGB to HSV is given below:

In RGB colors the red, green, and blue are divided by 255 to range from 0.255 to 0.1 and given by

$$G' = G/255$$

$$R' = R/255$$

$$B' = B/255$$

And also color components are calculated and it is given by

$$Cmax = max(R', G', B')$$

$$Cmin = min(R', G', B')$$

And change in color is given by delta $\Delta = Cmax - Cmin$

Hue value is given by the equation: $H = \begin{cases} 60° \times (G' - B' | \Delta \; mod6), Cmax = R' \\ 60° \times (B' - R' | \Delta + 2), Cmax = G' \\ 60° \times (R' - G' | \Delta + 4), Cmax = B' \end{cases}$

Value's value is given by the equation: $V = Cmax$

Saturation value is given by the equation: $S = \begin{cases} 0, & Cmax = 0 \\ \Delta | Cmax, & Cmax \neq 0 \end{cases}$

After converting RGB image to HSV image then

We use color mask to take pixels which have only a particular color. We find the continuous region where these colors are present. We find the center of the region.

4.3 Shape Detection:

In this project the shape detection uses Arc length Algorithm to identify the geometrical shapes. Arc length algorithm: it is used to determine the length of an irregular shapes and curves. In an image. It is consider the regions got by color detection. Then edges of the regions are found. By calculating the number of sides which bound the region we infer the shape of the object. If the size and shape of the object match our pattern then we consider tracking it. If the sides of the object is 3 we consider it as triangle, if 4 square or rectangle, if 5 then its pentagon and if it is more than 6 it is circle.

V. RESULTS

The proposed work is to build a low cost Robot to track an object in real time. Here the object considerd in this project is the geometrical shape or pattern with any colour. This achieved prototype Robot works in few meters distance in real time without any delay. As its prototype robot it works only for few distances.

An actual Robot is built which will track an object in real time by using Kalman Filter. This is a prototype Robot and it is low cost Robot which is shown in the below figures.

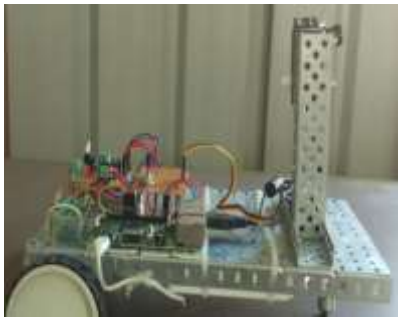

fig (a): side view of Robot

fig (b): Top view of Robot

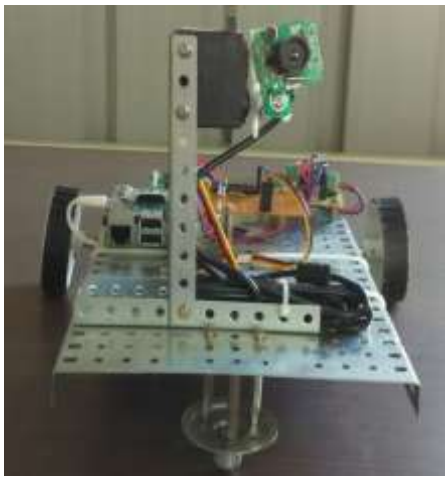

fig (c): Front view of Robot

The target object considered in this project is the geometrical shape or pattern with any colour. . The prototype model has been developed using Raspberry pi and it has successfully tracked the object as shown in the below figure.

VI. CONCLUSION

In this paper, the tracking of an object using Kalman Filter is proposed. The proposed work is achieved by building a prototype Robot which tracks the target object. The target object considered in this project is the geometrical shape or pattern with any colour. This Robot is better than the other Robots because of Low cost, Robustness to noise, with less delay. The prototype model has been developed using Raspberry pi and it has successfully tracked the object.

REFERENCES

[1]. C.-L. Chen, C.-C. Chou ―Active Pedestrian following using Laser Range Finder‖, IEEE Transactions On Information and Automations—Ii: pp. 690-695, Jun 2011.

[2]. C.-L. Chen, C.-C Chou, and F._L. Lian, ―Detecting and Tracking of Host People on a Slave Mobile Robot for Service Related-Related tasks. IEEE Int. On Instrumentation and Control. Information Technology and system Integration, pp. 01-06, Sep., 2011.

[3] D. Fox, The Dynamic window approach to collision avoidance,‖ IEEE Trans. On Robotics & Automation, 1997.

[4] D. Wolf and Sukhatme. B.-Online Simultanrous Localization and Mapping in Dynamic Environments, IEEE Transactions Robotics and Automation, pp.1-5.