LOCAWARD: A SECURITY AND PRIVACY AWARE LOCATION-BASED REWARDING SYSTEM

Madhuri Martis[1], Rameshkumar H K[2]

[1]M.Tech Student, [2]Assistant Professor, Dept. of Computer Science and Engineering, STJIT, Ranebennur, Karnataka, (India)

ABSTRACT

The proliferation of mobile devices has driven the mobile marketing to surge in the past few years. Emerging as a new type of mobile marketing, mobile location-based services (MLBS's) have attracted intense attention recently. Unfortunately, current MLBS's have a lot of limitations and raise many concerns, especially about system security and user's privacy. We propose a new location-based rewarding system, called LocaWard, where mobile users can collect location-based tokens from token distributors, and then redeem their gathered tokens at token collectors for beneficial rewards. Tokens act as virtual currency. The token distributors and collectors can be any commercial entities or merchants that wish to attract customers through such a promotion system, such as stores, restaurants, and car rental companies. We develop a security and privacy aware location-based rewarding protocol for the LocaWard system, and prove the completeness and soundness of the protocol. Moreover, we show that the system is resilient to various attacks and mobile users' privacy can be well protected in the meantime. We finally implement the system and conduct extensive experiments to validate the system efficiency in terms of computation, communication, energy consumption, and storage costs.

Keywords: Trusted Third Party (TTP), Mobile User's (MU''s), Central Controller (CC), Token Collectors (TC's), Token Distributors (TD's.

I. INTRODUCTION

With the rapid evolution of mobile devices, mobile location-based services (MLBSs) have emerged as a new type of mobile marketing. According to a 2010 report by Pew Research Center, on any given day, 1 per cent of online Americans used MLBSs. Juniper Research predicts that the revenues from MLBSs will surge to more than $12.7 billion by 2014.

Currently, there are various kinds of MLBSs. One of them is location-based social networking, such as Facebook Places, where users share their locations with friends and find others who are nearby. Another type of MLBSs requires the users to provide current or historical location proof to fulfil some purposes. For example, a hospital may allow doctors or nurses to access patients' documents only when they can prove that they are in a particular room of the hospital. A person accused of committing a crime is very much interested in being able to prove to the police that he was somewhere else rather than at the crime scene while the crime was committed. ' Mobile commerce is another branch of MLBS's, for example, forwarding advertisements to customers when they are near a business spot. These MLBS's do not consider rewarding services.

More recently, a new type of MLBS's called location based check-in game, which is developed based on location-based social networking, lets users earn beneficial rewards if they visit certain places. In particular,

some applications, including Foursquare, and Loopt Star let users check in different locales (e.g., coffee shops, restaurants, shopping malls) to not only compete with friends in games, but also earn rewards, points, or discounts from retailers and organizations.

The rewards and reward amounts can be different depending on time of day, how frequently the person has checked it in the past, and so on. However, these location-based check-in systems are limited in several aspects.

II. BACKGROUND

In particular, since the current systems use central servers to store all users' records, they can easily know which users have ever been to which places at what times for what purposes. Previous works on users' identity privacy in wireless networks are not applicable to MLB's .Figure. 1 shows the existing scenario

Although there has been some research on location privacy regarding general location-based services, such as k-anonymity cloaking, location obfuscation, pseudonym exchanges in mix zones, they all have their limitations

Figure 1: Existing System

III. RELATED WORK

Here we propose a secure, privacy-preserving, and realistic mobile location-based rewarding system, called LocaWard, which strives to address the above concerns. The proposed system consists of a trusted third party (TTP), mobile users (MU's), token distributors (TD's), token collectors (TC's), and a central controller (CC). The TTP issues each MU with a real identity and a corresponding certificate.

IV. SCOPE OF THE PROJECT

We will propose a secure, privacy preserving, and realistic location-based rewarding system, LocaWard. We will design a security and privacy aware protocol for the LocaWard system and prove its completeness and soundness.

We find that the system is resilient to many types of attacks and mobile user's privacy can be well protected as well. We will also evaluate the system efficiency by extensive real experiments and show that the computation, communication, energy, and storage costs are low.

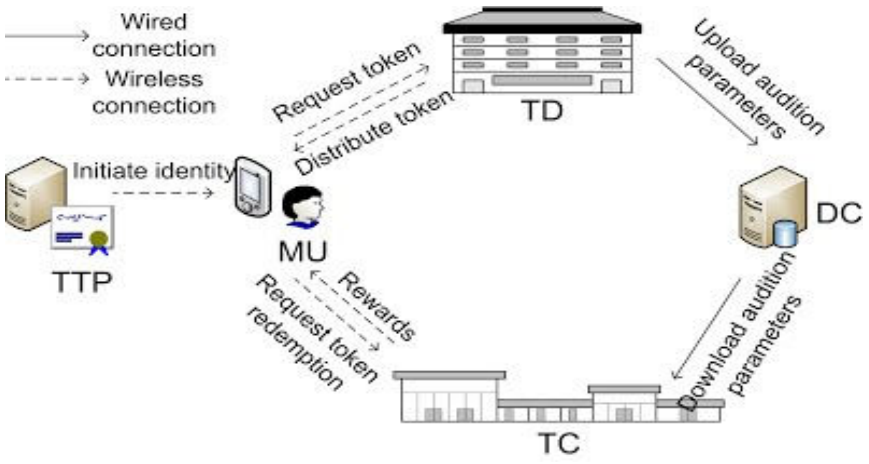

Figure 2: System Architecture

In LocaWard, the system entities include a Trusted Third Party (TTP), Mobile Users (MU's), Token Distributors (TD's), Token Collectors (TC's), and a Central Controller (CC). In what follows, we describe the functionalities and interactions of these system entities. Trusted Third Party (TTP): A trusted third party which issues each MU with an identity and a certificate. The TTP is only responsible for issuing identities and not involved in any other activities in the system.

4.1 Mobile Users (MU's)

The mobile devices which collect location-based tokens and redeem them for beneficial rewards. Each time that an MU visits a token distributor, it sends a request and receives a token through its WiFi interface. Whenever an MU meets a token collector, it can redeem its gathered tokens. After the token collector verifies that the tokens are redeemable, the MU will receive the corresponding rewards. The communications between MU's and token collectors can also be carried out via their Wi-Fi interfaces.

4.2 Token Distributors (TD's)

The commercial entities who issue redeemable tokens containing reward points to attract customers, such as stores, restaurants, and car rental companies. Each TD is equipped with a WiFi access point (AP) which can distribute location-based tokens. Besides, each TD also generates corresponding audition information and stores it in the CC for future token verification. TDs are connected to the CC through a backbone wired network, say the Internet.

4.3 Token Collectors (TCs)

The commercial entities who verify the MUs' token redemptions and reward the MUs
with benefits, for example, monetary rewards, coupons, gift cards. TCs communicate with MUs via WiFi interfaces and are connected to the CC via the backbone network. Note that some TDs can serve as TCs at the same time.

4.4 Central Controller (CC)

As commonly used in many mobile application systems we consider an online Center Controller run by an independent third party. It is responsible for storing audition information of a token and forwarding it to a TC when asked to.

V. PROPOSED METHODOLOGY

Here we propose a secure, privacy preserving, and realistic mobile location based rewarding system, called LocaWard, which strives to address the above concerns. The proposed system consists of a trusted third party (TTP), mobile users (MUs), token distributors (TDs), token collectors (TCs), and a central controller (CC). The TTP issues each MU with a real identity and a corresponding certificate. A legal MU is able to obtain a location based token when it visits a commercial entity that participates in the system, i.e., a TD.

The issued tokens at various TDs have the same format but possibly different indicated values. With all the collected tokens, an MU can redeem them for beneficial rewards not only at the same store or brand stores, but also at any other retailers or commercial entities, i.e., TCs, that have joined the system.

The amount of received rewards depends on the value represented by the collected tokens. Besides, the CC stores token audition information sent by TDs and provides it to TCs when required. Then, we design a security and privacy aware location based rewarding protocol for the proposed LocaWard system.

We assume that TDs, TCs, and the CC work in the semi honest mode, i.e., they faithfully and correctly execute the system protocol but are curious about MUs' privacy, including their personal information like real identities, token information, and location histories. Specifically, the protocol is composed of three parts: identity initiation, token distribution, and token redemption. In identity initiation, the TTP issues each MU with an identity and a corresponding certificate. Each MU keeps its identity private and generates a new pseudonym for each token request or redemption. The certificate is used for a user's identity authentication without revealing its real identity. In token distribution, a TD needs to verify if an MU requesting a token is a legal user in the system without knowing its real ID. After that, the TD issues the MU with an anonymous token which can be redeemed at any TC for rewards.

VI. CONCLUSION

Here we have proposed a secure, privacy preserving, and realistic location-based rewarding system, LocaWard. We have designed a security and privacy aware protocol for the LocaWard system and proven its completeness and soundness. We find that the system is resilient to many types of attacks and mobile users' privacy can be well protected as well.

We have also evaluated the system efficiency by extensive real experiments and show that the computation, communication, energy, and storage costs are low. Moreover, although the proposed security and privacy aware location-based rewarding protocol is for our LocaWard system, the techniques herein can be generalized to address security and privacy problems in general location based services and other areas like cloud computing.

VII. ACKNOWLEDGEMENT

I consider it is a privilege to express my gratitude and respect to all those who guiding me in the progress of my paper.

I wish my grateful thanks to Mr. Rameshkumar H K M.Tech, project guide, for his invaluable support and guidance. Madhuri Martis

REFERENCES

[1] Juniper Research, Mobile Location Based Services Applications, Forecasts and Opportunities 2010-2014, https://www. juniperre-search.com/reports/mobile_location_based_services, 2010.

[2] http://www.facebook.com/about/location.

[3] W. Luo and U. Hengartner, "Proving Your Location Without Giving up Your Privacy," Proc. 11th Workshop Mobile Computing Systems Applications, Feb. 2010.

[4] S. Saroiu and A. Wolman, "Enabling New Mobile Applications with Location Proofs," Proc. 10th Workshop Mobile Computing Systems Applications, Feb. 2009.

[5] V. Lenders, E. Koukoumidis, P. Zhang, and M. Martonosi, "Location-Based Trust for Mobile User-Generated Content: Applications, Challenges and Implementations," Proc. Ninth Workshop Mobile Computing Systems Applications (HotMobile '08), Feb. 2008.

[6] S. Loreto, T. Mecklin, M. Opsenica, and H.-M. Rissanen, "Service Broker Architecture: Location Business Case and Mashups," IEEE Comm. Magazine, vol. 47, no. 4, pp. 97-103, Apr. 2009.

[7] https://foursquare.com/.

[8] "JPBC: Java Pairing Based Cryptography," http://gas.dia.unisa. it/projects/jpbc.

BIOGRAPHY

Madhuri Martis is a student pursuing her Master degree in Computer Science and Engineering department at STJ Institute of Technology, Ranebennur, Karnataka, India. Her research interests are Computer Science related aspects such as Networking technology, Java programming language and web 2.0.

Ramesh kumar H K, is assistant professor in the department of Computer Science and Engineering at STJ Institute of Technology, Ranebennur, Karnataka, India. He received his Master degree in Computer Networks. His research interests are related to computer networks.

.

RFID BASED AUTOMOBILE SECURITY SYSTEM

Abhinav Matharoo[1], Dr. Sukhwinder Singh[2]

[1,2]Department of Electronics & Communication Engineering PEC University of Technology, Chandigarh, (India)

ABSTRACT

In this document a RFID based engine immobiliser is elaborated. RFID (Radio Frequency Identification) is used to deactivate the engine immobiliser via a LabVIEW interface. The LabVIEW program reads the 17 bytes and compares it to the 17 byte value stored in it initially. If both codes match our system send a signal to the engine control unit else silently sends an email to your email id.

***Keywords*: RFID, LabVIEW, VISA**

I. INTRODUCTION

Automobile security has always been a major concern of automobile manufactures. Continuous research is being carried out to prevent the cars from being stolen. RFID is a technology which can be used for the same. Each RFID tag has a unique code stored in it. This code can be read and interpreted by LabVIEW and further operations can be carried out depending on value read

II. RELATED WORKS

ntelligent Computerized Anti-theft System or iCATS is a system installed in almost every car manufactured by **Maruti Suzuki** India Limited. This system has an electronic chip embedded in the key of the car. This chip sends a signal to the engine control unit every time the key is inserted. Once the engine control unit verifies the code received is genuine it starts the engine. If the key code doesn't match the engine control units cut of power to the ignition and as claimed there is virtually no way to start the car. This ensures that only the person who possesses the original key will be able to start the car. Merely making a copy of the key won't suffice.

III. RFID

Radio Frequency Identification or RFID is a technology that uses electromagnetic field to transfer a unique code that is stored in a device called RFID tag. There are two types of RFID tags that are commonly used namely active tag and passive tag. An active tag has a power source and it constantly keeps sending the code for the reader to read. A passive tag on the other hand used the power emitted by RFID reader to transmit the code stored in it. As a result active RFID tags provide better range than passive RFID tags. The range of passive RFID tags depends on the frequency of RFID reader. Low range RFID reader works on 125KHz and prove a working range of 5 to 10 cm. UHF or Ultra High Frequency RFID readers can read tags from a distance of up to 1m. Long range RFID readers are usually expensive and are very bulky. They are not suitable for our

application. So in this project we will be using 125Khz RFID reader which will read passive tag embedded in a key chain as shown in Fig. 1

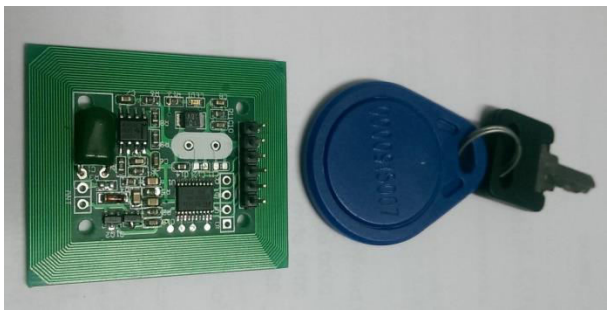

Fig. 1 RFID Tag and Reader

IV. LABVIEW

LabVIEW stands for Laboratory Virtual Instrument Engineering Workbench. It is graphical programming software developed by National instruments. We will be using this software to implement Virtual instrumentation i.e. controlling hardware virtually using software. The RFID reader send the RFID code via serial UART communication. This serial data can be read by LabVIEW using Virtual Instrument Software Architecture (VISA). A USB to TTL convertor is attached as a peripheral to the PC. The PC identifies it as a standard COMM port. VISA libraries can then be used to read the tag id and send commands to the micro controller

V. HARDWARE

The major hardware components used to implement this system are:

1. 125 Khz RFID reader
2. Atmega8
3. PL2303
4. Key switch

Fig.2 shows the usage of above hardware in form of a flow chart

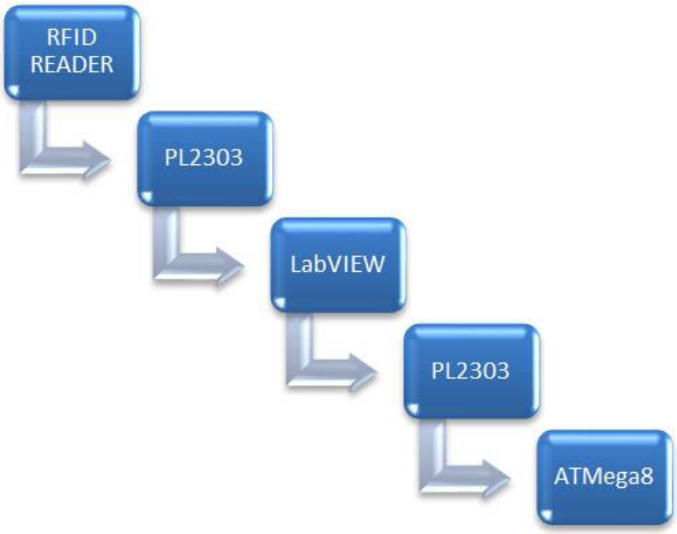

Fig 2 Block Diagram

VI. IMPLEMENTATION

The RFID reader is connected to the Rx to PL2303 and Tx of PL2303 is connected to Atmega8. The bytes received by PL2303 are read by LabView and displayed in hex and string format in the boxes shown in Fig. 3

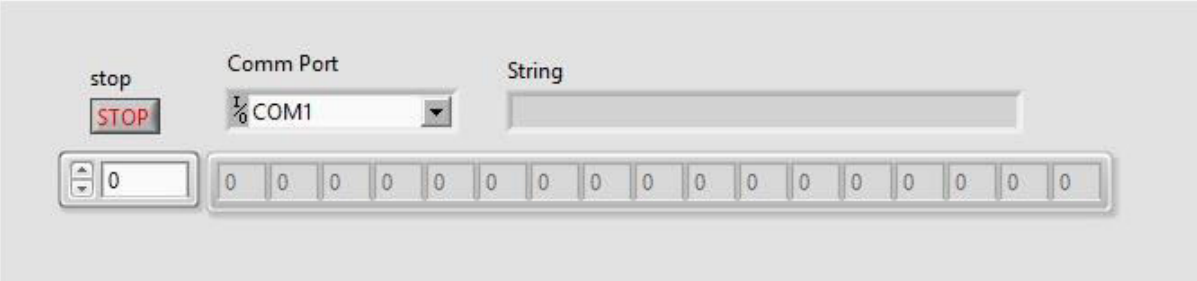

Fig. 3 Front Panel of VI

This information is visible due to the block diagram shown in the Fig. 4. This block diagram specifies the characteristics of received data ie 9600 baud rate and 1 stop bit. It also stores the data into a string and an array of unsigned 8 bit numbers.

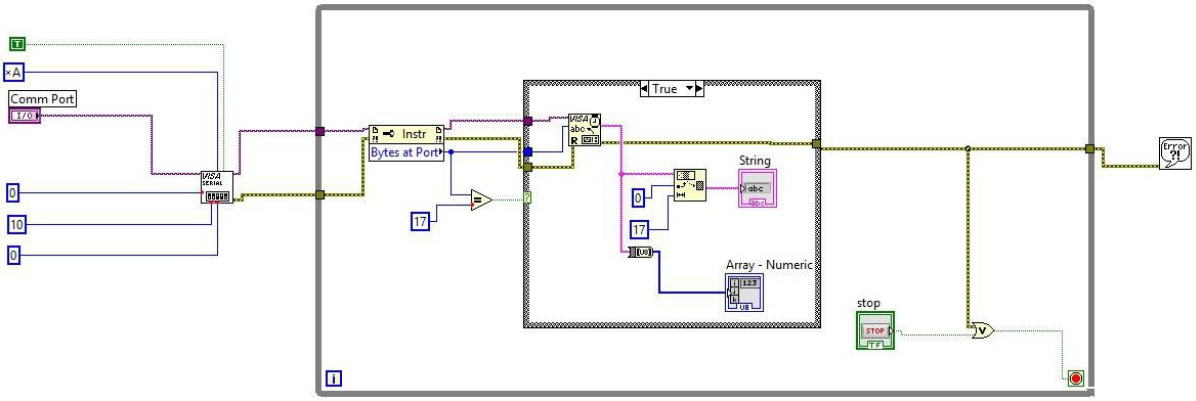

Fig. 4 Block Diagram of VI

The final component of implementation of this system is a VI which generates and sends an email every time wrong key tag is used on this system. This alerts the user in case of theft. Fig. 5 is the block diagram of the final VI which generates a email and sends it to a user from a system defined email id on gmail.

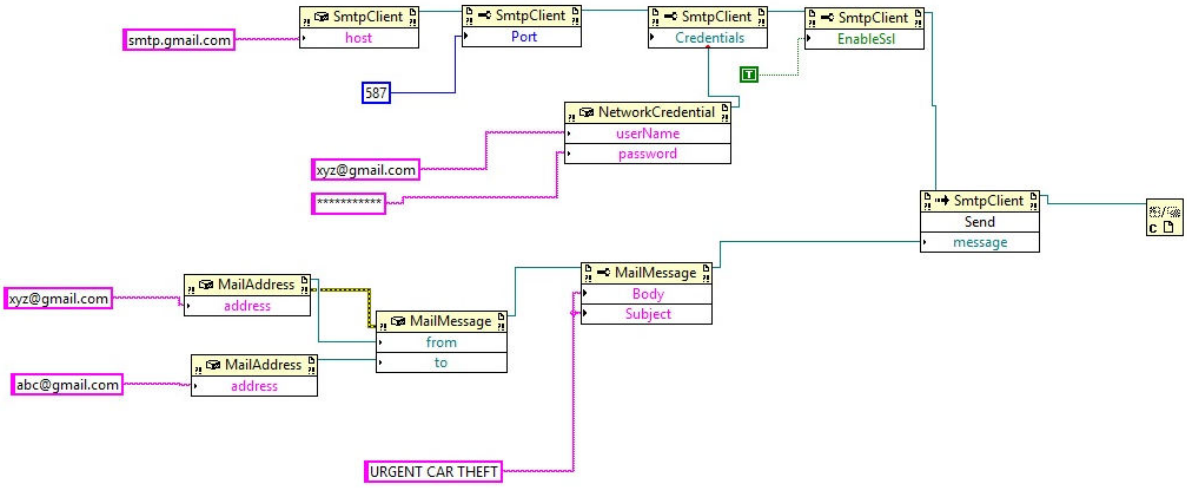

Fig. 5 Block Diagram Which Send Email

V. CONCLUSION

As technology is growing rapidly its use for malicious purposes is also growing. This system provides a very safe and cheap method to protect your car from theft. RFID tags are almost impossible to replicate without knowing the tag id. Using LabVIEW for virtual instrumentation further cuts down the cost of the entire system as actual hardware is very less. This also reduces the chances of hardware failure. Therefore in present scenario our system provides a failsafe method of protecting your car from theft.

VI. FUTURE SCOPE

This system can further be improved by using safer RFID tags with longer key codes. Further break-in warnings can be sent to the user's phone using a GSM module. A in car camera can click photos of the thief and store it so that the thief can be identified. The location of the car can be uploaded using GPS technology to track the car. As cars are getting smarter and smarter more and more features can be added to make the system even more secure than it already is.

REFRENCES

[1]. http://www.theautomotiveindia.com/forums/technical-zone/2037-how-marutis-icats-system-works.html
[2]. https://www.ni.com/visa/
[3]. http://www.ni.com/labview/
[4]. http://www.ni.com/community/
[5]. https://labviewhacker.com

FLEXURAL FATIGUE BEHAVIOR OF RECRON FIBER REINFORCED CONCRETE

Haresh Desai[1], Mr. Nilesh Hapaliya[2]

[1]Post Graduate Student, [2]Assistant Professor, Department of Civil engineering, RK University, Rajkot, Gujarat, (India)

ABSTRACT

This paper presents the experimental investigation carried on Recron Fiber Reinforced Concrete subjected to flexural fatigue failure. The beam specimen of size 700mm x 150mm x 150mm is used Recron fibers of size 12mm length in 0.5%,1%,1.5%,2%,2.5%,3%,3.5%,4%,4.5% ,5%and 6% volume are used in M25 grade concrete.

I. INTRODUCTION

The mechanics of fatigue failure of brittle materials, such as concrete and mortar, is a complex process. A fatigue failure mechanism for concrete or mortar develops in three stages. The first comprises of initiation of flaws or cracks followed by second stage of slow growth of flaws or cracks to a critical size. In the last stage, rapid propagation of the flaws or cracks of a critical size takes place. In a large volume of concrete or mortar all the three stages would be active at any instant of time; however, for a sufficiently small volume the above three stages are sequential.

Fiber reinforced concrete is a relatively new structural material developed through extensive research and development during the last three decades. It has already found a wide range of practical application and has proved a reliable structural material having superior performance characteristics compared to conventional concrete. Due to this benefit, the use of FRC has steadily increased during the last two decades and its current field of application includes: airport and highway pavements, earthquake-resistant and explosive-resistant structures, mine and tunnel linings, bridge deck overlays, hydraulic structures, etc. Concrete is one of the most versatile building materials. It can be cast to fit any structural application. It is readily available in urban areas at relatively low cost. Concrete is strong under compression yet weak under tension. The advantages of using concrete include high compressive strength, good fire resistance, high water resistance, low maintenance and long service life. Several earthquakes in recent years throughout the world have prompted the structural engineering community to pursue considerable research on the behaviour of structures under seismic loading. One area of research has been to improve the design of conventional reinforced concrete for better performance under seismic shaking. Another potential area of research, believed by many structural engineers as more appropriate is to develop innovative composite materials with improved seismic performance. One such new structural material is the fiber reinforced concrete (FRC).

FRC is a composite material made of hydraulic cement, aggregates and small diameter, short length randomly distributed fibers. It may also contain mineral admixture and chemical admixture commonly used with conventional concrete. Addition of these fibers significantly improves many of the engineering properties of mortar and concrete. Moreover, fibers when introduced into concrete make it more homogeneous and isotropic and transform it to a more ductile material. When concrete cracks, the randomly distributed fibers arrest the

micro cracking mechanism and limit the crack propagation thus improving the strength and ductility. The extent of improvement depends on the type, aspect ratio and volume fraction of fibers as well as the quality of concrete mix.

Recron 3S prevents the micro shrinkage cracks developed during hydration, makingthe structure/plaster/component in herently stronger. Further, when the loads imposed on concrete approach that of failure cracks will propagate, sometimes rapidly. Addition of Recron 3 s to concrete and plaster arrests cracking caused by volume change (expansion and contraction), simply because 1 kg of Recron 3s offers millions of fibers which support mortar/concrete in all directions. The modulus of elasticity of Recron 3s is high with respect to the modulus of elasticity of the concrete or mortar binder. Recron 3s fiber helps in increasing flexural strength. The post cracking behavior has shown its ability to continue to absorb energy as fibers pull out.

1.1 Advantages of Recron Fiber

- Improve homogeneity of the concrete by reducing segregation of aggregates
- Reduce shrinkage crack
- Increases compressive, Flexural and Tensile Strength.
- Reduce water permeability
- Improves ductility of concrete under cyclic loading
- Increases freeze/thaw resistance
- Improves durability of the concrete
- Replaces or reduces " Non Structural Steel" in floors, roads and pavements and concrete overlays i.e. slab on grade

II. LITERATURE REVIEW

It is reported that fatigue strength of 74% and 83% of the first crack static flexural strength at 2 million cycles of completely reversal and non-reversed loads respectively for a steel fiber content of 2.98% by volume (Batson et al., 1972).[1]

Behavior of steel fiber mortar overlaid concrete beams under cyclic loading was investigated (Wei et al., 1996) whereas the behavior of composite concrete sections reinforced with conventional steel bars and steel fibers, and subjected to flexural cyclic loading was analyzed (Spadea and Bencardino, 1997) and mechanical model of the same was developed.[2]

A paper (Jun and Stang, 1998) reported that the accumulated damage level in fiber reinforced concrete in fatigue loading was 1~2 order of magnitude higher than the level recorded in static testing of the same materials.[3]

III. MATERIALS

It is necessary to get the maximum performance out of all of the material involved in producing a concrete. The materials involved in this project are Portland cement, coarse aggregate, fine aggregate. The additional material involved in this project is Triangular Polyester Fiber-Recron Fiber.

3.1 Cement

The cement used for this investigation was OPC 53 grade Binani cement. The specific Gravity of the cement was found 3.15 and it is conforming to IS 12269-1987.

3.2 Fine Aggregate

The fine aggregate used for all the specimens was complying with IS 383-1970. The specific gravity of fine aggregate was 2.63, sieve analyses were conducted and it was found that the sand used was conforming to Zone II grading. The fineness modulus of fine aggregate was 2.82.

3.3 Coarse Aggregate

The coarse aggregate used was hard broken stone drawn from an approved quarry. Mean size of 20mm and nominal size of 10 mm aggregate were used. The specific gravity of 20 mm coarse aggregate was 2.86. And 10 mm aggregate were 2.84. And it was confirming to IS 383-1970.

3.4 Water

Portable water available in the laboratory was used for casting all the specimens in this investigation. The quality of water was found to satisfy the requirements of IS 456-2000.

3.4 Recron Fiber

The fiber used is a 12 mm long, with an Aspect ratio of 240. For a mean sized aggregate of 20 mm, 12mm fiber length is adequate. Tensile strength is 4000-6000 Kg/Cm2.

Figure 1: Recron Fiber

3.5 Mix Design

In this study, Indian Standard recommended Method (IS 10262-2009) has been adopted for mix Design.

Table 1: Material Specification

S. No.	Material	Name of Property	Experimental result
1	Cement	Specific gravity	3.15
		Fineness of cement	8%
		Initial setting time	115
		Standard consistency	34%
		Final setting time	240
2	Fine aggregate	Specific gravity	2.63
		Grading	Zone II

		Water absorption	1.25
		Fineness modulus	2.82
3	Course aggregate	Specific gravity	2.86
		Water absorption	0.58%
4	Recron Fiber	Specific gravity	1.35
		Length (mm)	12
		Diameter (mm)	0.05
		Aspect ratio	240

The mix proportion adopted for concrete is 1:1.886:3.068 with W/C ratio of 0.5 for a desired slump of 75mm-100mm. The volumes of fiber added from 0.5% to 5% weight of cement. Casting of 66 concrete beams (15cm x 15cm x 70cm) using Recron fibers in the concrete for determining flexural strength of concrete.

3.6 Testing

One normal concrete beam of size (700mmX150mmX150mm) is casted in the mould and kept to cure for 24 hours. It is then unmolded and kept in water tank for 28 days. After 28 days, the beams would be tested for their flexural strength in the following method. The bed of the testing machine should be provided with two steel rollers, 38mm in diameter on which the specimen is to be supported. This rollers should be so mounted that the distance from centre to centre is 60 mm for 150 mm specimen.

The bearing surfaces of the supporting and the loading rollers shall be wiped, clean and any loose sand or other material should be removed from the surfaces of the specimen where they are to make contact with the rollers.

Two points loading can be conveniently provided by the arrangement as shown in figure. The load is transmitted to through a load cell and spherical seating on to a spreader beam. This beam bears on rollers seated on steel plated bedded on the test member with mortar, high strength plaster or some similar material. The test member is supported on the roller bearings acting on similar spreader plates. The loading frame must be capable of carrying the expected test load

without significant distortions.

Ease of access to the middle third for crack observations, deflection readings and possibly strain measurement is an important consideration, as is safety when failure occurs.

The specimen was placed over the two steel rollers bearing of 50 mm left from the ends of the beam. The remaining 600 mm was divided into three parts of 200 mm each as shown in the figure. Two point loading arrangement was done as shown in the figure. Loading was done by the hydraulic jack of capacity 600 KN. At the centre one dial gauges were used for recording the

deflection of the beams.

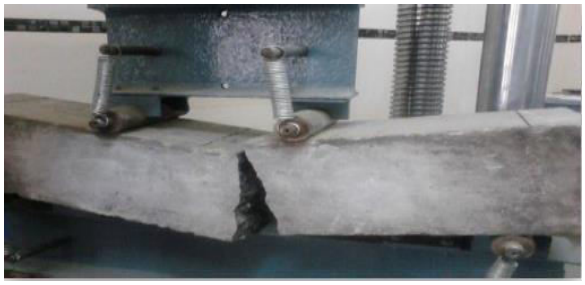

Figure 2 : Beam Testing Setup **Figure 3 : Beam After Two Point Loading**

IV. RESULT ANALYSIS

Table 2 Test Result for Flexural Strength (IS 516-1959)

Sr.No	% of	Load in KN		Avg.Braking Dist. in mm	Flexural Strenth N/mm
		No.			
1	0%	1	29.86	248.33	5.36
		2	30.86		
		3	29.57		
2	0.5%	1	35.55	240.00	6.46
		2	37.25		
		3	34.14		
3	1%	1	32.90	258.33	5.96
		2	32.20		
		3	34.14		
4	1.5%	1	35.25	271.66	6.74
		2	38.21		
		3	38.80		
5	2%	1	37.51	266.67	6.68
		2	38.46		
		3	35.35		
6	2.5%	1	35.37	278.33	6.83
		2	40.67		
		3	37.78		
7	3%	1	38.06	266.67	7.62
		2	42.56		
		3	47.85		
	3.5%	1	40.42	253.33	
		2	50.53		
		3	47.85		
8	4%	1	44.13	250.00	8.60
		2	53.15		
		3	48.78		
	4.5%	1	49.26	261.00	
		2	56.30		
		3	49.15		
9	5%	1	55.34	253.33	9.82
		2	59.13		
		3	50.95		
10	6%	1	73.86	263.33	12.81
		2	74.68		
		3	67.30		

From the result I can obtain the percentage of Recron fibers to be added to attain the required flexural strength i.e. 10% increase in flexural strength compared to normal concrete.

Table 3 Percentage of Recron fiber W.R.T Desire Strength

Sr.No.	Required increase in Flexural Strength	% of fiber required by weight of concrete
1	10%	0.36%
2	20%	0.73%
3	30%	2.58%
4	40%	2.92%
5	50%	3.43%
6	60%	3.98%
7	70%	4.42%
8	80%	4.86%
9	90%	5.12%
10	100%	5.30%

11	110%	5.48%
12	120%	5.61%

REFERENCES

[1]. Batson, G., Ball, C., Bailey, L., Lenders, E., and Hooks, J. (1972). "Flexural fatigue strength of steel fiber reinforced concrete beams". ACI Journal, 69(11), 673-677.

[2]. Spadea, G., and Bencardino, F., (1997). "Behavior of fiber reinforced concrete beams under cyclic loading", Journal of Structural Engg., ASCE, 123(5), 660-668.

[3]. Jun, Z., and Stang, H. (1998). "Fatigue performance in flexure of fiber reinforced concrete", ACI Materials Journal, 95(1), 58-67

[4]. Dr. N. Ganesan& Dr. P.V.Indira, Behaviour of steel fibre reinforced high performance concrete members under flexure, Behaviour of steel fibre reinforced high performance concrete members under flexure May 2007, Vol. 88, pp 20-23, 2007.

[5]. R.DNeves& J. C.OFernandes de Almedia, Compressive behavior of steel fibre reinforced concrete, Structural concrete, 2005, Vol. No. 1, pp 1-9, 2005.

[6]. Jean-Louis Granju, Corrosion of steel fibre reinforced concrete from the cracks, LaboratoireMatériaux et Durabilité des Constructions, INSA-UPS, 135 Avenue de Rangueil, 31077 Toulouse Cedex 4, France. 2004.

[7]. P.S. Song & S. Hwang, Mechanical properties of high strength steel fibre reinforced concrete, Construction and building material 18 2004, pp 669-673, 2004.

[8]. Janusz Potrzebowski, The splitting test applied to steel fibre reinforced concrete , Institute of Fundamental Technological Research, Polish Academy of Sciences, Warsaw, wi tokrzyska 21 , Poland, 2003.

[9]. P.S. Mangat, Tensile strength of steel fiber reinforced concrete, Department of Construction and Urban Studies Preston Polytechnic, Preston, England, 2003.

[15] Indian standard Code of Practice for Plain and Reinforced Concrete, IS- 456: 2000, 4th Revision, Bureau of Indian Standards, New Delhi.

[16] Indian standard recommended guidelines for Concrete Mix Design, IS 10262: 2009. 1st Revision, Bureau of Indian Standards, New Delhi.

[17] Indian standard Recommended guidelines for Concrete Mix Design, IS 10262: 1982, 5th Reprint 1998, Bureau of Indian Standards, New Delhi.

[18] Indian standard Specifications for coarse and fine aggregates from natural sources for concrete, IS 383-1970, Bureau of Indian Standards, New Delhi.

[19] Indian Road Congress for Guidelines for Concrete Mix Design for pavements, IRC 44: 2008, 2nd Revision, Indian Road Congress, New Delhi.

[20] Indian standard method of tests for strength of concrete, IS 516: 1959, Edition (1991-07), Bureau of Indian Standards, New Delhi.

[21] M.S.Shetty, ―Concrete Technology Theory and Practices‖, . Chand & Company, New Delhi.

[22] www.Civilengineering.com

[23] www.alibaba.com

[24] www.scincedirect.com

DISCOVERY AND VERIFICATION OF NEIGHBOR POSITIONS IN AD HOC NETWORKS

Nikhil Jadhav[1], Kushal Bang[2], Anurag Boggavarapu[3], Akshay Gaikwad[4], Zarina Y. Shaikh[5]

[1,2,3,4,5] *Dept. of Computer, JSPM's RSCOE, Pune, (India)*

ABSTRACT

Discovery of positions of neighboring nodes has become an important factor in today's world due to an increase in the use of ad-hoc network. Because of the increasing demand, security has also become an important factor as fake positioning of nodes in the ad-hoc networks is possible. So in this project we will be discovering position of nodes in ad-hoc network and we will verify it to check whether it is a trusted node or a faulty one. For distance verification we will be using signal strength and GPS co-ordinates.

Keywords: Neighbor Position Verification , Ad Hoc Network

I. INTRODUCTION

In fast growing technologies there are many applications which require location awareness. Co-ordination of the movement of robots in robotics, geographic routing, spontaneous network and traffic monitoring, vehicular networks are some of the fields which require location awareness of all the neighboring nodes.

Neighbor discovery (ND) provides an important functionality for wireless devices that is to discover other devices that they can communicate with makes it easy to abuse ND. The verification of node locations is an important issue in mobile networks and it becomes particularly challenging in the presence of adversaries aiming at harming the system.

Therefore we need a solution to 1) To correctly establish the location of nodes in spite of attack feeding false location information, and 2) To verify the position of neighbor so as to detect adversarial nodes.

In this project we are discovering the position of nodes in ad-hoc network using GPS (Global Positioning System.). RSSI (Received Signal Strength) is used for distance calculation of node from the verifier node in the network. RSSI gives the value of power strength from client to the access point, for instance. RSSI is the relative signal strength in a wireless environment and can be measured in any unit of power. It can be expressed in decibels or percentage from 1-100. The value obtained from this method can either be positive or negative [1].

II. SYSTEM AND ADVERSARIAL MODEL

Here, we consider a WiFi network and consider its nodes as communicating neighbors if it can reach other nodes directly [2]. We assume that every node knows its position in the network with some maximum error. To achieve this, the nodes are equipped with GPS receiver.

We assume each node owns a set of private key and public key as mentioned in the emerging architecture for secure and privacy-enhancing communication [3]. Node X can encrypt and decrypt data with its key and public key of other node and can produce digital signature with its private key. Nodes can authenticate messages of other nodes through public key cryptography as mentioned in [4]. Nodes are assumed to be true if they act in accordance with the NPV protocol otherwise adversarial.

III. NPV: AN OVERVIEW

NPV is a protocol which consists of a node, hereinafter called as verifier which is used to verify and discover the position of its communication nodes. The verifier is used for starting the NPV protocol. The protocol uses a set of messages for discovering the position of the communicating nodes. The purpose of the messages is to get the information about the two communicating nodes which we can use for finding out distance between them. After collecting the information, verifier uses the signal strength information obtained from communicating neighbor to compute distance between all pairs of nodes in network [3]. After calculating the distance we classify the nodes into 2 parts for completing the verification process. The 2 parts are verified nodes, i.e., which are safe for communication, faulty nodes, i.e., which are not safe for communication. The process of verification is carried out with help of two tests, the direct symmetry test and cross symmetry test and multilateral test. Thus after carrying out the process correctly we can easily avoid the adversary from entering the network for communication and secure the network from such adversary.

IV. NPV PROTOCOL

We detail the message exchange between the verifier and the nodes connected to it in the network, and series of verification test carried out on them.

4.1 Message Exchange

Verifier starts the protocol by broadcasting message (Poll) to the all the client nodes in the network. The encryption technique used is RSA [5]. This message is encrypted using the public key of the client node. Then the client node replies to the verifier with its geological coordinates and signal strength of the ad hoc network. This message is encrypted using public key of the verifier. Upon receiving the message from the client node, the verifier carries out verification test on the information obtained from client node. A list of trusty nodes (true node) is prepared by the verifier and is sent to all trusted client nodes in the network. All the false nodes are removed from the network and are labeled as false node.

We consider following notations for message exchange.

S=Verifier

X=Client node

Ns=List of all the Clients

Rx=RSS value of X

Latx & Longx= Latitude and Longitude values of X

True_nodes= List of nodes which are verified/Valid

Faulty_nodes=List of nodes which are faulty

We use the following algorithms where algorithm 1 is used by the verifier node i.e., S and algorithm 2 is used by communicating neighbor of S.

Algorithm 1: Message Exchange: Verifier

1. Node S do
2. S→* : {Poll,Ks}
3. When receive REPLY from X ∈ Ns do
4. S: stores Rx, Latx ,Longx
5. After verification of X
6. If (X==Verified then
7. True_node ← X
8. Else Faulty_node ←X

Algorithm 2: Message Exchange: Client

1. when receive Poll from S do
2. X: find Rx
3. X: find Latx Longx
4. X: encrypt Rx, Latx ,Longx using Ks
5. X: send encrypted message.

4.2 Position Verification

To verify the position of the node, we take a step forward to verification process with the message exchange which takes place between the nodes in the network. The verifier decrypts the data received and finds the position of all the nodes participating in the network. To make the system safer we carry out two tests simultaneously. They are:

1. Direct Symmetry test
2. Cross Symmetry test

4.2.1 Direct Symmetry Test:

In direct test the verifier (server) sets the RSS value, the nodes in the system send their RSS value to the verifier through the message. The verifier sets a range for the values i.e., from 0-100 and the distance is calculated according to the value, the value 100 means the node is exactly next to the server and the distance between them is 0 meters. As the node move away from the verifier the value decreases and the distance between them increases. The value of the RSS changes according to the strength of the signal.

Verifier sets the RSS value according to the usage and wants to share the network area and allow the nodes in the network. If the nodes which fall outside the range of the RSS value are encountered, the verifier rejects those particular nodes because the distance between the verifier and node is greater than the Ad-Hoc range, the node is placed in the unverified nodes list.

Algorithm 3: DST

1. Node S do
2. Forall X ∈ Ns
3. If(Rx within range) then
4. S: True_node ←X
5. Else S: Faulty_node←X

4.2.2 Cross Symmetry Test

Cross Symmetry test is where the verifiers carries out a test with respect to itself. The verifier keeps record of its own geographical values i.e. longitude (v) and latitude (v), as the position of the verifier changes the geographical value changes. The node which comes in the network through the message exchange, the node's geographical values are also sent in encrypted form to the verifier (latitude(n) and longitude(n)). Through the geographical values we calculate the distance between the verifier and the node. As the node moves inside the network the geographical values change and the distance is calculated. This process is carried out throughout the system lifetime. If the distance between the node and the verifier is different compared to the distance obtained from RSS value and the geographical value with error range the node is placed in the faulty node list.

Algorithm 4: CST

1. Node S do
2. Forall X ∈ Ns, X ∄ Faulty_node
3. If(Drx-Dlx)>Er then
4. S: True_node ←X
5. Else S: Faulty_node←X

Where,

Drx =Distance calculated through RSS value,

Dlx =Distance calculated through latitude and longitude,

Er=Error range of ± 5 meters.

V. RESULTS

We performed the simulation of this project using three laptops each with a GPS dongle and a Wi-Fi. The GPS dongle provided latitude and longitude with an accuracy of 3-5 meters. Therefore the error ratio while distance comparison in second test is ±5 meters. Initially the range considered is of 15meters. The error ratio considered for the signal strength is 3 units. The valid range for the signal strength is 0-100. Initially when both client and verifier is at same place the signal strength is 100, but as client moves away from verifier the signal strength reduces by 7units per meter. Therefore, the signal strength to distance calculation is done using the following formula:

(1) $\text{Distance} = (100 - x)/7$

Where,

x = Signal strength.

Distance calculation formula between two different geological positions is as follows:

(2) $a = sin^2\left(\frac{\Delta\varphi}{2}\right) + \cos\varphi 1.\cos\varphi 2.sin^2\left(\frac{\Delta\lambda}{2}\right)$

(3) $c = 2.atan2(\sqrt{a}, \sqrt{(1-a)})$

(4) $d = R.c$

Where,

φ = latitude,

λ = longitude,

R = earth's radius (mean radius = 6,371km) [6].

We examined this protocol at different location with the success rate of 70 percent. The following graph shows the comparative study of the ideal values and those obtained through this methodology, where the X-axis represents the RSSI Values in percentage and the Y-axis represents the Distance in meter

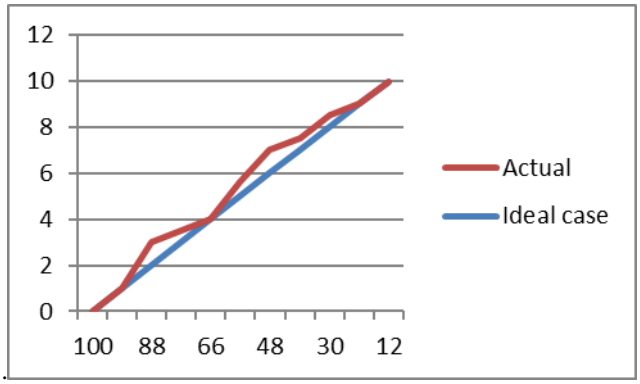

Fig.1 Comparative Study of Ideal and Actual Values

The success rate highly depends upon the accuracy of the GPS coordinates obtained from GPS dongle.

VI. CONCLUSION

In our project we are successfully able to discover the nodes in the network and verify the position of it. But, this is valid only if all the nodes are in the same plane as that of the server. If the planes of the client or server node is different (i.e. height) we are not able to find the position of the node accurately. In order to do this we require a higher level of coding and additional number of devices.

VII. FUTURE SCOPE

In our project we are using GPS for positioning i.e. for plotting. Instead of that we can use trilateration method for positioning. So that it can be used in places where GPS co-ordinates are not available (no range area, but should know coordinate of verified server). Using trilateration method we can find the position of nodes in the network and can as prepare a 3D model of it.

REFERENCES

[1] http://www.speedguide.net/faq/what-is-wireless-rssi-level-418.

[2] P.Papadimitratos, M.Poturalski, P.Lafourcade, D.Basin, S.Capkum, and J-P, Hubaux, Secure Neighborhood Discovery: A Fundamental Element for Mobile Ad-Hod Networks," IEEE comm.Magazine, vol.46, no.2, pp.132-139, Feb.2008 (neighbor discovery based on distance).

[3] S.Capkun and J-P.Hubaux,"Secure Positioning in Wireless Networks,"IEEE J.Selected Areas in Comm., Vol.24, pp.221-232, Feb.2009.

[4] G. Calandriello, P. Papadimitratos, A. Lioy, and J.-P. Hubaux, "On the Performance of Secure Vehicular Communication Systems," IEEE Trans. Dependable and Secure Computing, vol. 8, no. 6, pp. 898-912, Nov./Dec. 2011.

[5] http://en.wikipedia.org/wiki/RSA_%28cryptosystem%29

[6] http://www.movable-type.co.uk/scripts/latlong.html

3 TIER CAR SECURITY SYSTEMS

Nikhilesh Goel[1], Dr. Sukhwinder Singh[2]

[1]UG Student, [2]Supervisor, Assistant Professor, PEC University of Technology
Chandigarh, (India)

ABSTRACT

In this proposed paper, three tier security system for cars is achieved using Code Hopping, RFID (Radio Frequency Identification) and LabVIEW. Code hopping is used to send a different code every time to lock or unlock the car with the help of RF (Radio Frequency). The RFID signal is used to control the engine immobilizer. The car will start only if the RFID signal matches to the one stored in the engine immobilizer. LabVIEW is used as an override in case the keys get lost or get locked inside the car.

Keywords: Code Hopping, RFID, Engine Immobilizer, LabVIEW, RF

I. INTRODUCTION

Automobile security has attained many rapid changes but the cost of all the security upgrades is so high and it is not affordable for all the vehicle owners. Another problem is that there is no safe override available in case the keys get lost or are locked inside the car. The project is aimed at providing a safe override in addition to basic security systems that already exist. The override is provided by using a password protected VI.

II. EXISTING SECURITY SYSTEMS

KEELOQ is a proprietary hardware-dedicated block cipher that uses a non-linear feedback shift register (NLFSR). It is embedded in the centre lock system of the car. Every time the lock or unlock button is pressed on the keyfob it produces a unique code that is encrypted. The code is decrypted and if it matches the lock or unlock operation is completed. It requires at least three weeks of brute force attack to decrypt this code. ICATS or Intelligent Computerised Anti-Theft System was developed by Maruti Suzuki. An electronic chip is embedded in the keyfob of the car. It sends a signal every time the key is inserted. If the code matches the code that is stored in the Engine Control Unit, the car starts otherwise the power to the ignition is cut off and the car does not start.

III. SYSTEM

The opening and closing of doors is controlled by sending a rolling code through RF (Radio Frequency) transmitter receiver pair. The RF works at a frequency of 433 MHz and has 1 MHz of bandwidth. Whenever the lock or unlock button is pressed on the keyfob a 40 bit code is generated which is transmitted with the help of UART. The code is generated with the help of an algorithm which generates a new code every time the button is pressed and is called a rolling code. A rolling code transmitter is useful in a security system for providing secure encrypted radio frequency (RF) transmission. Upon comparison of the fixed and rolling codes with stored codes

and determining that the signal has emanated from an authorized transmitter, a signal is generated to actuate an electric motor to open or close a movable component.

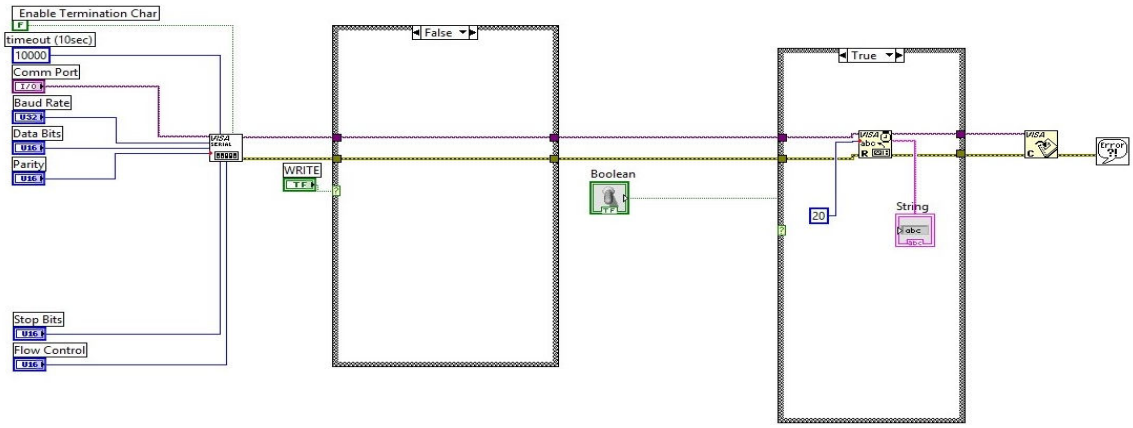

Fig. 1 Block Diagram for RF Transmission

The Engine Control Unit is controlled by sending a unique code through a RFID tag. RFID sends the code through electromagnetic field. A passive RFID tag is used in this case as it provides a range of 5-10 cm which is ideal for this application. So we use a 125kHz passive RFID tag and reader in this project.

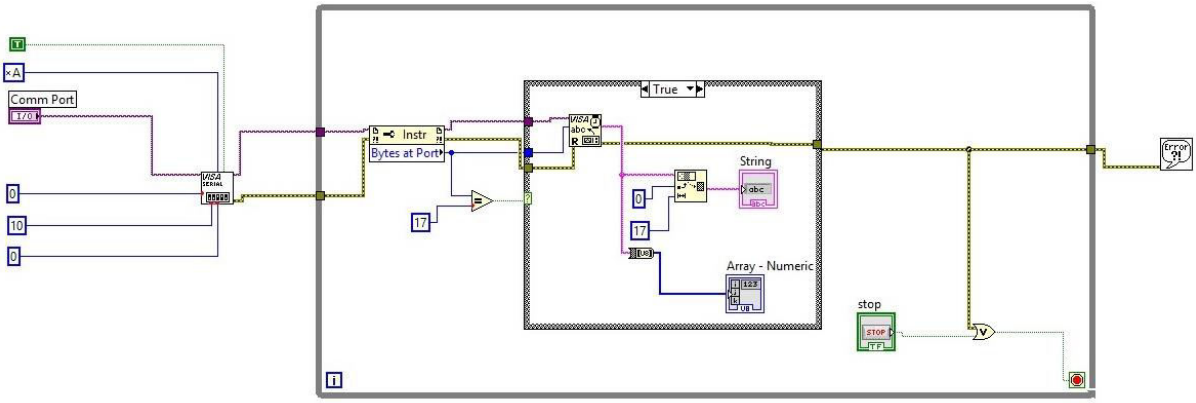

Fig. 2 Block Diagram for RFID

The override is provided by using LabVIEW. In LabVIEW we can use password protected VI to secure the block diagram or we can delete the block diagram so that it cannot be accessed by any user and data stored in it cannot be modified. We can send both the RF and RFID codes using LabVIEW. The code is sent by serial UART communication.

IV. HARDWARE

The hardware components used in this project are:

1. Atmega-8
2. RF Module (433 MHz)
3. RFID Tag
4. RFID Reader
5. PL 2303

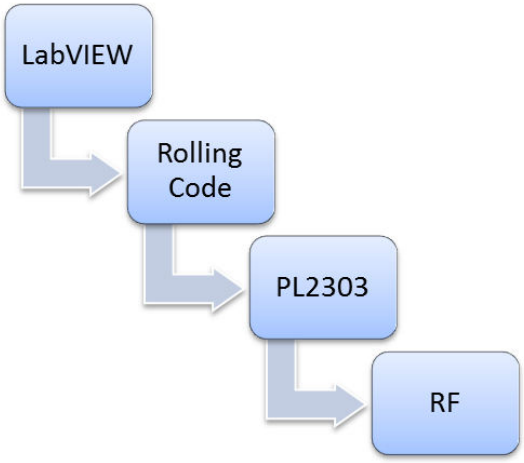

Fig. 3 Steps for RF Transmission

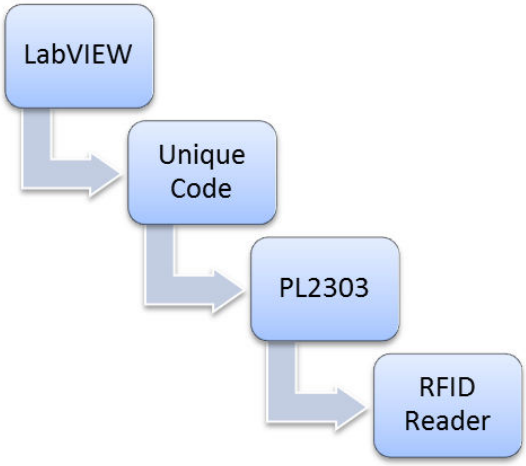

Fig. 4 Steps for RFID Code Transmission

V. CONCLUSION

This project creates an efficient and cost effective system for security of cars. It is difficult to decrypt a rolling code and almost impossible to replicate RFID tags without knowing the tag ID. Moreover this system provides a safe override using LabVIEW which cannot be hacked.

VI. FUTURE SCOPE

The system can be further improved by using longer rolling codes and better techniques of encryption. The RFID tags can also be made safer by using longer codes. The location of the car can be tracked using GPS. A message can also be sent to owner's phone in case of a break-in by using a GSM module.

REFERENCES

[1]. https://www.ni.com/visa/
[2]. http://www.ni.com/labview/
[3]. http://www.ijerd.com/paper/vol2-issue10/D02101822.pdf
[4]. http://www.microchip.com/pagehandler/en-us/technology/embeddedsecurity/technology/home.html

MECHANISM TO TRANSLATE RELATIONAL-BASED DATABASE TO COLUMN-BASED DATABASE

Ms.Reena[1], Ms.Renu[2]

[1,2]SRCEM, PALWAL (India)

ABSTRACT

Lately, column-based database (CDB) has been considered as a standard solution dealing with the big data. But there is no standard translation mechanism mapping from Relational Database (RDB) to CDB. In this paper, we proposed a mechanism translating RDB to CDB. We use HBase as our CDB platform. HBase is a column-based distributed database management system built on Hadoop Distributed File System (HDFS) and has been considered as the typical column-based database on HDFS. In addition,
we build a search engine for Taiwan academic journals using our translation mechanism.

Keywords: HBase, Hadoop, Translation Mechanism, Relational Database, Column-Based Database, ER-Model, Search Engine

I. INTRODUCTION

1.1 Background and Motivation

The digital information size explodes rapidly in nowadays environment. Chevron's CIO says hiscompany accumulates data at the rate of 2 terabytes – 17,592,000,000,000 bits – a day. While the storage capacities of hard drives have increased massively over the years, access speeds—the rate at which data can be read from drives—have not kept up. It takes a long time reading all data or searching specific data from the single disk—and writing is even slower. Therefore, distributed file systems like Google File System (GFS) [1], Hadoop Distributed File System (HDFS) [2] burst out leading the trend A distributed file system reduces the I/O time by reading from multiple disks concurrently. Working in parallel, one can reduce access time significantly. HBase[3] is a column-based distributed database system which provides manipulating methods based on HDFS. This paper aims to provide the translation mechanism from ER Model database schema to HBase column-based database schema. In order to test our translation mechanism, we take the Entity Relation Model (ERM) designed for storing academic journal papers (AJP) as input, translate the ERM into CDB Schema (CDBS) and build the CDB for AJP on HBase. This paper first simply introduces the basic concept of HBase and the translation methods between HBase and Relational Database and shows the true translation for periodical search engine at last.

1.2 HBase

HBase is a distributed column-oriented database built on top of HDFS, modeled on Google's BigTable database[4]. HBase is the Hadoop application to use when you require real-time read/write random-access to very large datasets[2]. The most basic unit for tables in HBase is a column. One or more columns form a row that is addressed uniquely by a row key. A number of rows, in turn, form a table, and there can be many of them. Each column may have multiple versions, with each distinct value contained in a separate cell. Rows are

composed of columns, and those, in turn, are grouped into column families. This helps in building semantically or topical boundaries between the data. Columns are often referenced as family:qualifier with the qualifier being any arbitrary array of bytes[3]. A table is made up of regions. Each region is defined by a start key and end key, may live on a different node, and is made up of several HDFS files and blocks, each of which is replicated by Hadoop. All table accesses are by the row key, secondary indices are possible through additional index tables. There is no SQL language in base HBase, HBase does not support complex searching functions. However, there is a Hive/HBase integration project[5] that allows Hive QL statements access to HBase tables for both reading and inserting. But the performance is not as good as expected. The better way is to design the index table and access through it.

II. TABLE TRANSLATION MECHANISM

In ERM, there are three different relationships among entities considering cardinality, i.e., one to one relationship (1-1), one to many relationship (1-m) and many to many relationship (m-n). If an entity A has a relationship with entity B and, similarly B has that with C, we defined that A has a recursive relationship (R-R) with C. In addition, we defined that the R-R length between 2 entities is the number of internal nodes on this R-R plus 1. For instance, the R-R length between A and C equals 2 (one internal node B plus 1). In our translation, we defined five types of translations from ERM to CDBS including (1) entity translation, (2) 1-1 translation, (3) 1-m translation, (4) m-n translation and (5) R-R translation. In the following, we shall discuss each of them in the following subsections.

2.1 Entity Translation

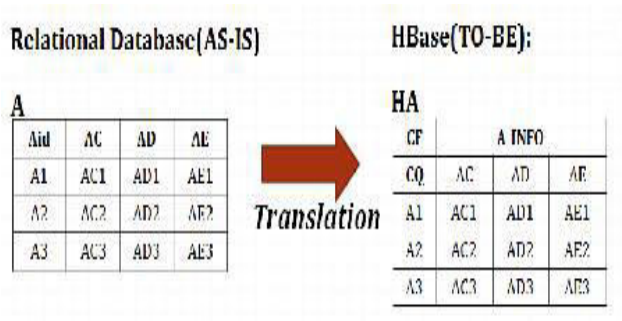

In ERM, an entity represents a relational table. A relational table contains a primary key and several non-primary key attributes. The primary key may be composed of several fields. In CDBS, a column family (CF) contains the qualifiers having the similar characteristics; each qualifier is unique in the containing column family. In relational table, a primary key value is the key identifies a particular row in relational table, and a row key in HBase table (HTable) also identifies a particular row in HTable. Thus, primary key in relational table can be considered as the row key in HTable. We combine a set of primary key values to be the unique row key value in HBase table and use notation —:‖ to combine primary key containing two or more fields. Translation method is shown as following:

In Figure 1, we create a column family named A_INFO in *HA* to group the qualifiers and take the attributes' name as qualifiers in CDBS table. The naming of column family is user-defined. For the convenience of defining the translation, we pre-defined presentation to the features of the tables as follows:

1.For the relational table A, we define that A has

1.1 Let pk^A be the primary key of A, pk^A may consists of one or more fields where are called primary key fields.

1.2 Assumes that $pk^A = \{ pk_e^A \}$, $1 \le e \le k$, *be the set of primary key* fields, where k is the number of primary key fields in A .

1.3 A set of non-primary key fields $f^A = \{ fd^A \}$, $k < d \le q+k$, where q is the number of nonprimary key fields in A.

2. For relational table B , we define that B

2.1 Let pk^B be the primary key of B, pk^B may consists of one or more fields where are called primary key fields.

2.2 A set of non-primary key fields $f^B \{ fc^B \}$ in B , $z < c \le y+z$ where z is the number of onprimary key fields in.

2.3 A set of primary fields, $pk^B = \{ pkh^B \}$,$1 \le h \le z$, be the set of primary key fields, where z is the number of primary key fields in B.

2.4 B has a set of tuples tk^B .

Due to the entity translation from RDB to CDB for whole tables in relational database described above, we defined a translation function for single table, which is **entity(A)**, where A to be the input table for translation.

entity(A)

Assumption:

- Let A be a relational table for translation.

Translation steps:

- For table *A*, an HTable with a set of row keys rkl^A is constructed. The construction for *HA* includes two steps, the first step is to define the row key for *HA* and the second step is to define the column family for *HA*.

The only way for user to retrieve data is by row key. Users can access the *HA* table by A's Primary key, but unable to do joins or other SQL queries. HBase may retrieve data by adding filters, but with the huge amount of data, the speed performs badly. Hence, in order retrieve data quickly, we have to build indexes for the entities in HBase. The building of indexes is under progress; In this paper, we only discuss the mapping of relational table into HBase.

2.2 1-1 Translation

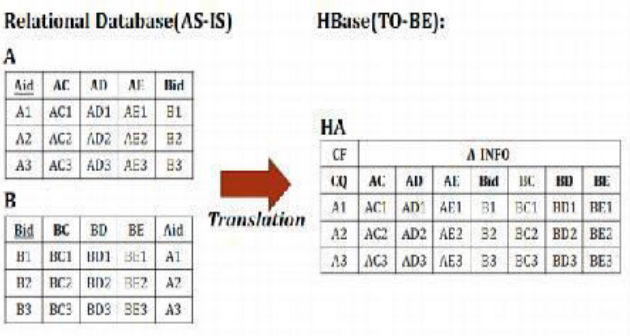

Figure.2 1-1 Translation

1-1 relationship stores the relationship of 2 entities using the Foreign Key (FK). A table uses Aid to be the FK and B table uses Bid. The two entities with 1-1 relationship actually will be stored in one table in relational database doing full outer join on two entities, taking one entity'sprimary key as its primary key. Thus, the

translation is simple by mapping the actual table stored in RDB to CDB. The translation steps are shown as following:

1-1(A,B)

Assumption:

- Assume A entity and B entity has 1-1relationship, C is the actual table stored in the relational database taking A's primary key as C's primary key.

Translation steps

The translation includes two steps as follows:

- Step 1:
- ✓ Generate C table by A table full outer join B table on A's foreign key equals to B's primary key.
- Step 2:
- ✓ Execute entity(C) which accept C table as input and produce an HTable HC.

By the translation defined above, here we get the HC as shown in Figure 2, taking A's primary key as row key and preserve all B's attributes values in the HC.

2.3 1-M Translation

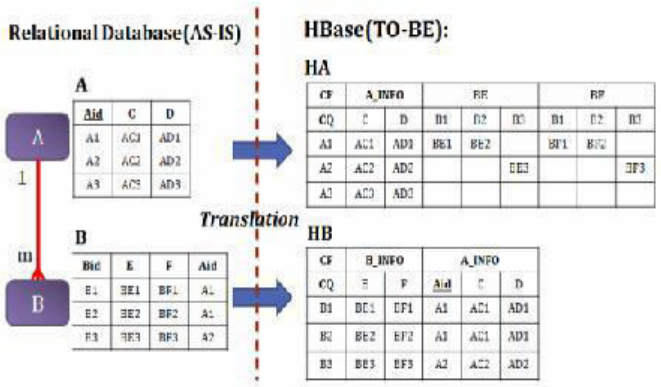

Figure.3 1- M Translation

In m's perspective, 1-side is considered as 1-1 related with itself. Hence, we do 1-1 relationship translation to A and B at m side, that is, ***1-1(B, A)***. We'll get HB as Figure 3 shows, recording the corresponding A primary key and it's attributes in HB. In 1's perspective, we have to store the multiple m's information. The qualifiers are the best thing to identify the multiple B's row keys. Hence, we create a column family for each attribute in B and use B's primary key as qualifier to store the attribute value for B. We call the 1's perspective translation the 1-side translation. However, B's primary key may contain several fields. Thus, we combine the B's primary key field value into one single value and defined a 1-side translation method ***1-m-single(A,B)*** shown as follows:

1-m-single(A,B):

Assumption:

- ➢ Let A and B to be the 1-m relationship table in RDB, A is at the 1-side and B is at the mside.
- ➢ HA and HB is constructed for the mapping HTables in CDB.

1-m (A,B)

Assumption:

- ➢ Assume A entity and B entity has 1-mrelationship, A is the 1-side and B is the mside.

Translation steps:

The translation includes two steps as follows:

- Step 1:
- ✓ Execute 1-1(B, A), which takes B's primary key as row key generating an HTable HB.
- Step 2:

Execute 1-m-single(A,B), which generates an HTable HA preserving B's data related to A.

2.4 M-N Translation

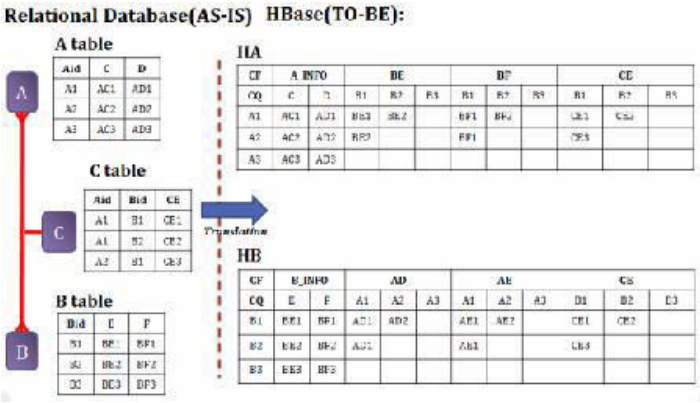

Figure.4 M-N Translation

In m-n relationship, the relation is considered as two 1-m relationship. In order to make the translation, we do 1-m relationship to both mside and n-side. In Figure 4, HA preserves B's attribute column family, BE and BF and HB preserve A's attribute column family, AD and AF.

In addition, C table is the relation table generated by A and B, thus, C has 1-m relationship with A and B. Thus, we have to do the 1-m translation for the 1-side. The relation table C is not going to be preserved because C depends on A and B, so that the relationship can be stored in A and B table. For this reason, we don't have to translate the m-side relationships.

m-n(A, B, C)

Assumption:

- ➢ Assume A entity and B entity has m-n relationship, C is relational table generated by A and B.

  Translation steps*:*
- ➢ Execute 1-m(A, B), 1-m(B, A)
- ➢ Execute 1-m(A, C), 1-m(B, C)

2.5 R-R Translation

 ISBN: 978-81-931039-4-4

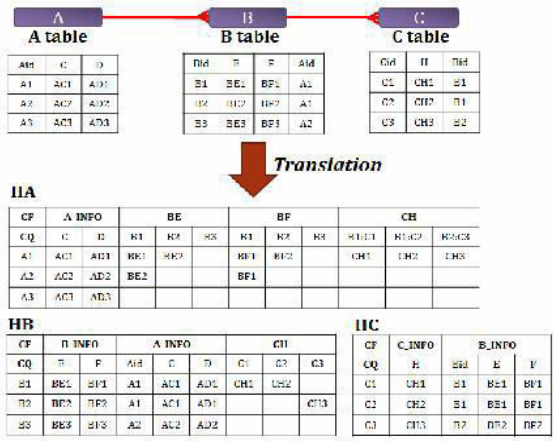

Figure.5 R-R Translation

According to our translation, we might have done the translation between two entities. This makes user can easily draw the related information between two tables. However, there is R-R situation happened in ERM. One might want to draw the relative information between three or more tables. For example, there are three tables A, B and C, A and B has the 1-m relationship and B and C has the 1-m relationship, in our translation, we will preserve the B's information into A's table, but no C's information, for that C has the relationship with A. User gets C's information by accessing through A, B and C table, but this makes draw speed relatively slow. Thus, in order to draw C's information immediately, C's information should be stored in A table. We called the translation the R-R translation. R-R translation is user-decided; it is not necessary and is on the demand of user. R-R can be simplified into multiple 1-m relationship combinations, which is the A, B, C relationship described above; for the reason that other relationships are not the components of R-R relationship. m-n can be separated into 2 1-m relationships, so that we can treat it with the 1-m relationship. 1-1 is combined into one table, so that for the table having 1-1 shall be treated as one table. Hence, we discuss the R-R relationship translation for the tables composed of 1-m relationships.

In Figure 5, the translation between A and B, B and C are done respectively. We combine C's attributes into HA's column family. Follow the 1-m translation previously defined, we take C's primary key to be the qualifier. But one thing we have to notice is that C is related to A due to B, so C's primary key cannot be taken to be the qualifier. The solution is to combine B and C's primary key to be the unique qualifier. Thus, when dealing with the R-R situation, we have to combine the primary key of internal nodes in order to identify the value.

r-r translation(A, C)

Assumption:

- Assume that A and C are two relational tables having the R-R relationship with R-R length n. Let A be the 1-side and C be the m-side.
- Let RRc^={*Tr* }, 1≤r≤n-1 be the set of relational tables in the R-R relationship between A and C, excluding A and C.

Translation steps:

Construct a temporary relational table D = C.

- for (i = n-1; i < 1; i--)

  {

  D = full_outer_join(. D)

  }

 ISBN: 978-81-931039-4-4

return 1-m(A, D)

III. PERIODICAL SEARCH ENGINE

In this section, we take the real implementation of AJP search engine ERM as an example to clearly describe the translation from RDB to CDBS.

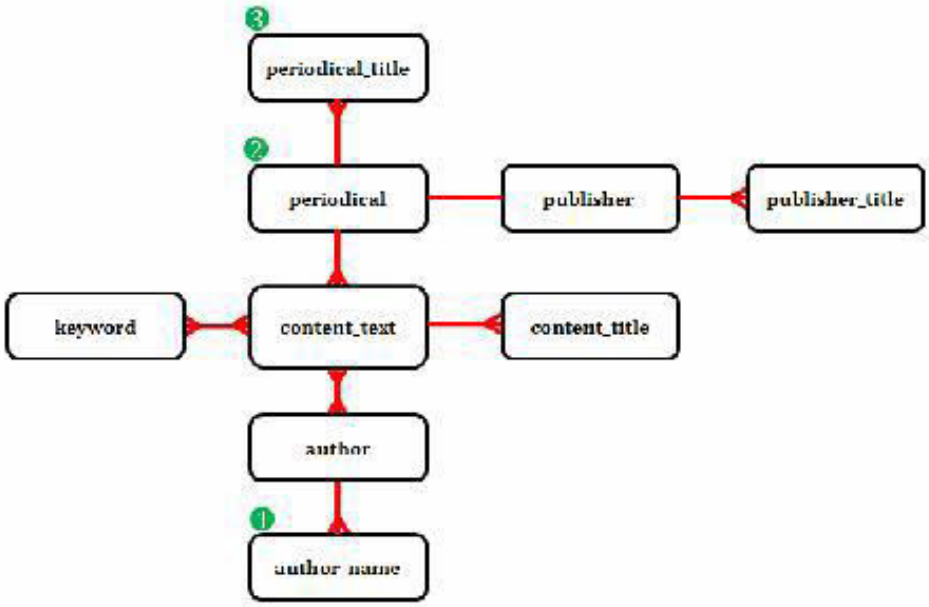

Figure.6 The AJP Search Engine ER Model

As the ER Model shown in Figure 6, the tables of each entity and its attributes is described below (PKs are underlined)

- author(author_id, author_identity_id)
- periodical(content_id, location)
- periodical_title(content_id, content_language, content_title_text)
- content_text(id, text_id, chapter_id, content_id, text_language, content_text)
- publisher(content_id, location)
- publisher_title(content_id, content_language, publisher_title)
- content_title(content_id, content_text)
- keyword(id, keyword_text)
- author_title(author_id, author_language, author_text)

In Figure 6, we see many R-R situations, for instance, periodical_title to author_name. Actually, not all of the R-R should be translated; it depends on the user requirements. For instance, we don't require author_name's information when we access periodical_title table. Thus, it is not necessary to deal with such relationship. In our AJP search engine, we only do the R-Rs translation containing content_text, the only R-R to deal with is the one whose nodes starts or ends at content_text. Consequently, there are 3 R-Rs been translated, which are (1) content_text →author_name (2) content_text→periodical_title (3) periodical→publisher.

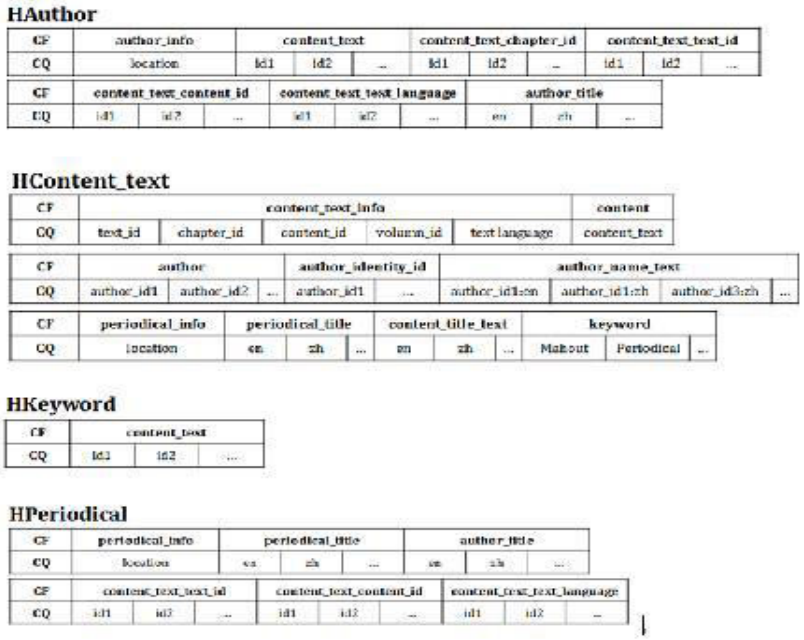

Figure.7 The AJP Search Engine CDBS

As shown in Figure 7, we get (1) HContent_text (2) HKeyword (3) HAuthor (4) HPeriodical in HBase finally. In the translation from ERM to CDBS, we don't preserve the following tables (1) HAuthor_name (2) HContent_Title (3) HPublisher_Title. The reason is that in the concept of the AJP search engine, some of the tables are created only to preserve the 1-m relationship with other tables. For example, the author_name table preserves the relationship with Author. Thus, these kinds of tables are created only if we have requirements on it or we have to access it. However, in the above translation we translate the relational tables into multiple corresponding HBase tables, due to the concept of Google Bigtable, the whole translated tables can be integrated into one Bigtable, distinguished by column families. But the HBase currently does not do well with anything above two or three column families because of compaction and flushing mechanism might increase the unnecessary I/O loading[6]. Hence, we translate the relational table into multiple corresponding HTables.

IV. CONCLUSION

This paper proposes a translation mechanism from RDB to CDB and builds an AJP search engine to verify the translation. According to the mechanism proposed, one can easily translate their system database into the CDB, not limited to HBase. This paper contributes to providing the approach to build the standard translation methods and stimulating the development of Object Relationship Mapping (ORM) in the future. This in-progress research will keep an eye on the translation in the more detailed translations, like the Business Object (BO) translation, or the sub-type, super sub-type translations. Furthermore, we will pay more attention on the AJP search engine we developed, try to create the indexing mechanism for it and test the performance and stability of the CDB.

REFERENCES

[1]. Ghemawat, H. Gobioff, and S.-T. Leung.: The Google file system. SIGOPS Oper. Syst. Rev., vol. 37, pp. 29-43(2003).

[2]. White, T.: Hadoop: The definitive guide. Yahoo Press (2010).

[3]. George, L.: HBase: The Definitive Guide. O'Reilly Media, Inc (2011).

[4]. F. Chang, J. Dean, S. Ghemawat, W. C. Hsieh, D. A. Wallach, M. Burrows, T. Chandra, A. Fikes, and R. E. Gruber.: Bigtable: A distributed storage system for structured data. ACM Transactions on Computer Systems (TOCS), vol. 26, p. 4, (2008).

[5]. Integrating Hive and HBase, http://www.cloudera.com/blog/2010/06/integratinghive- and-hbase/

[6]. The Apache HBase Book, http://hbase.apache.org/book.html

ENTHALPY WHEEL APPLICATION FOR HEAT RECOVERY IN HEAT EXCHANGER

Mr. Vishal. P. Hegana[1], Prof. P.R. Kulkarni[2]

[1]PG Scholar, Heat Power Engineering Department, J.J. Magdum College of Engineering, Jaysingpur, Kolhapur, Maharashtra (India)

[2]Associate Professor, Dean Academics, Mechanical Engineering Department, J.J. Magdum College of Engineering, Jaysingpur, Kolhapur, Maharashtra (India)

ABSTRACT

A heat exchanger is a device built for efficient heat transfer from one medium to another. The medium may be separated by a solid wall, so that they never mix, or they may be in direct contact. Heat recovery system is one of the best applications of heat exchangers which use energy recovery ventilators.[1] Many options like rotary enthalpy wheel, heat pipe, thermo siphon, twin towers are available for heat recovery. Enthalpy wheel is an Energy Recovery Ventilator (ERV) consists of a rotating wheel partitioned by a hygroscopic membrane.[2] It is a regenerative type of heat exchanger. It exchanges sensible as well as total heat. Sensible heat is transferred through storage mass while moisture is transferred through hygroscopic material. Heat wheels typically have a sensible effectiveness of 50% to 80% and a total effectiveness of 55% to 85%. It is competitive than other ERVs in compactness and heat transfer effectiveness. These devices do not require special alignment as required by thermo siphons. They provide control over performance by adjusting the rotor speed. But it suffers high maintenance cost. Enthalpy wheels find application in recovery of heat from exhaust gases in Heating, Ventilation and Air-conditioning (HVAC) applications. It can be effectively installed in projects that require a large percentage of outdoor air and have the exhaust air duct in close proximity to the intake can increase system efficiency by using a heat wheel to transfer heat in the exhaust to either pre-cool or preheat the incoming air.

Keywords: Enthalpy Wheel, HRV, ERV, Latent Effectiveness

I. INTRODUCTION

1.1 What is Heat Exchanger?

Heat exchanger is a device in which the exchange of heat between two fluids at different temperature takes place. Heat exchanger utilizes the fact that where there is temperature difference, flow of energy occurs. The fluid which receives the heat is called cold fluid and the fluid which gives heat is called hot fluid. Basically heat exchangers work on phenomenon of convection.

1.2 Types of Heat Exchangers

- Direct transfer type:
  - Tube in tube type:
    - Parallel flow type
    - Counter flow type:

- Shell and tube type
  - Single pass
  - Multi pass
- Cross flow type:
  - One fluid mixed
  - Both fluids mixed
  - Both fluids unmixed

- Regenerator or Storage Type:
  - Stationary Matrix Type
  - Rotating Matrix Type
- Direct Contact Type:

1.3 Related Terms

1.3.1 Effectiveness

The heat exchanger effectiveness, ε, is defined as the ratio of the rate of heat transfer in the exchanger, Q, to the maximum theoretical rate of heat transfer i.e. Q_{max}

$$\varepsilon = \frac{Q}{Q_{\max}}$$

1.3.2 NTU

The number of transfer units (NTU) is an indicator of the actual heat transfer area or physical size of the heat exchanger. The larger the value of NTU, the closer the unit is to its thermodynamic limit. It is defined as

$$NTU = \frac{UA}{(\dot{m}c_p)_{\min}}$$

1.3.3 Capacity Ratio

The capacity ratio, C_r, is representative of the operational condition of a given heat exchanger and will vary depending on the geometry and flow configuration (parallel flow, counter-flow, cross flow etc.) of the exchanger. This value is defined as the minimum heat capacity rate divided by the maximum capacity rate i.e.

$$C_r = \frac{(\dot{m}c_p)_{\min}}{(\dot{m}c_p)_{\max}}$$

1.4 Applications of Heat Exchangers

- Space heating
- Refrigeration and air conditioning
- Power plants
- Chemical plants
- Petrochemical plants
- Petroleum refineries
- Natural gas processing

Heat exchangers are widely used in all areas of thermal engineering. The research work in heat exchanger has led to many advances. Scientists are mainly focusing on the areas like compact heat exchangers, heat recovery systems etc. We have mainly focused on rotary enthalpy wheel from heat recovery systems for HVAC applications.

II. ENERGY RECOVERY VENTILATION

It is the energy recovery process of exchanging the energy contained in normally exhausted building or space air and using it to treat the incoming outdoor ventilation air in residential and commercial HVAC systems. The benefit of using energy recovery is the ability to meet the ASHRAE ventilation & energy standards, while improving indoor air quality and reducing total HVAC equipment capacity. This is carried out by using energy recovery ventilators.

This technology has not only demonstrated an effective means of reducing energy cost and heating and cooling loads, but has allowed for the scaling down of equipment. Additionally, this system will allow for the indoor environment to maintain a relative humidity of 40% to 50%. This range can be maintained under essentially all conditions. The only energy penalty is the power needed for the blower to overcome the pressure drop in the system.

III. ENERGY RECOVERY VENTILATORS

3.1 Introduction to Energy Recovery Ventilators

An Energy Recovery Ventilator (ERV) is a type of air-to-air heat exchanger that not only can transfer sensible heat but also latent heat. Since both temperature and moisture is transferred, ERVs can be considered total enthalpic devices. On the other hand, a Heat Recovery Ventilator (HRV) is limited to only transferring sensible heat. HRVs can be considered sensible devices only because they exchange only sensible heat.

3.2 Types of Energy Recovery Devices

Energy Recovery Devices	Type of Transfer
Rotary Enthalpy Wheel	Total & Sensible
Heat Pipe	Sensible
Run Around Loop	Sensible
Thermo siphon	Sensible
Twin Towers	Sensible

Table: 3.1- Types of Energy Recovery Devices

Thermo siphon refers to a method of passive heat exchange based on natural convection which circulates liquid without the necessity of a mechanical pump. Its intended purpose is to simplify the pumping of liquid and/or heat transfer, by avoiding the cost and complexity of a conventional liquid pump.

Heat pipe is a device used to obtain very high rate of heat flow. The surface area required for heat transfer is relatively small. The heat transfer is obtained theoretically at isothermal conditions using latent heat of evaporation of a working fluid.

 ISBN: 978-81-931039-4-4

IV. ROTARY ENTHALPY WHEEL

The rotating wheel heat exchanger is composed of a rotating cylinder filled with an air permeable material resulting in a large surface area. The surface area is the medium for the sensible energy transfer. As the wheel rotates between the ventilation and exhaust air streams it picks up heat energy and releases it into the colder air stream. The driving force behind the exchange is the difference in temperatures between the opposing air streams which is also called the thermal gradient. Typical media used consists of polymer, aluminium and synthetic fibre.

The Enthalpy Exchange is accomplished through the use of desiccants. Desiccants transfer moisture through the process of adsorption which is predominately driven by the difference in the partial pressure of vapour within the opposing air-streams. Typical desiccants consist of Silica Gel and molecular sieves. Today energy recovery ventilation has arrived as mainstream technology for the HVAC The air-to-air heat exchanger, specifically the rotary exchanger known as a heat wheel or enthalpy wheel, would answer the need. Enthalpy wheels use the energy which is normally lost in the exhaust air to heat, cool, humidify or dehumidify the outside air as it is introduced into the building. Not a new idea, heat wheels were proven technology in use for several decades. Air exchange updated the technology with modern structural design and lightweight polymer materials. Improved maintainability, greater reliability and an expanded range of applications are the results of this industry.

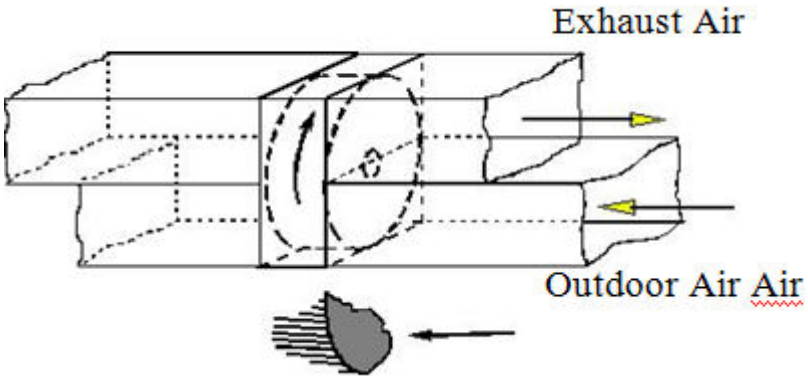

Fig. 4.1 Heat Conducting Material With Optional Desiccant Coating

4.1 Classification of Enthalpy Wheel

There are three types of enhtalpy wheels

- Sensible heat wheels
- Dehumidifier wheels
- Enthalpy wheels

For the same air inlet temperature these wheels are operate on same principle but due to its capability to transfer the moisture, we expect different humidity and outlet temperature.Performance characteristic of wheels are determined the physical properties of the porous matrix.

Sensible heat wheels require non-sorbing material with large thermal capacity since heating and cooling of air stream is desired.

Maximum moisture transfer is necessary in dehumidifier wheels, so they use max. sorbat material with large capacity of moisture capacity and low thermal capacity.

Sensible wheels are used for utilising exhaust heat. These wheels give great amount of heat recovery. The difference between enthalpy and desiccant wheels include:

Enthalpy wheels are designed for maximum exchange of humidity of sensible heat and desiccant are designed for maximum exchange of humidity. This affects the type and quantity of adsorbent materials used to coat the wheels. Enthalpy wheels are typically easier to clean and require more frequent cleaning because they handle more total air flow. Enthalpy wheel rotate faster up to 25 rpm and desiccant wheels are rotate only few times per hour.

4.2 Principle of Operation

4.2.1 Heat Transfer

The rotor with its axial, smooth air channels serves as a storage mass, half of which is heated by the warm air stream and half of which is cooled by the cold air stream, in a counter-flow arrangement. Consequently, the temperature of the storage mass varies depending on the axial coordinate (rotor depth) and on the angle of rotation. The principle of operation is easy to understand by following the condition of an air channel during one revolution (see following fig.). From this process, the following can be seen:

- The air temperature at the exchanger outlet is not uniform; it depends on the angle of rotation.
- The heat recovery efficiency may be influenced by adjusting the speed of rotation.
- The heat recovery efficiency may also be influenced via the storage mass: wider or narrower air channels, different thickness of the storage material, other rotor depth. These parameters also affects pressure drop.
- The specific heat output capacity depends on the temperature difference between the two air streams. Hence the rotary heat exchanger is suitable for heat as well as cool recovery, i.e. for winter and summer operation.

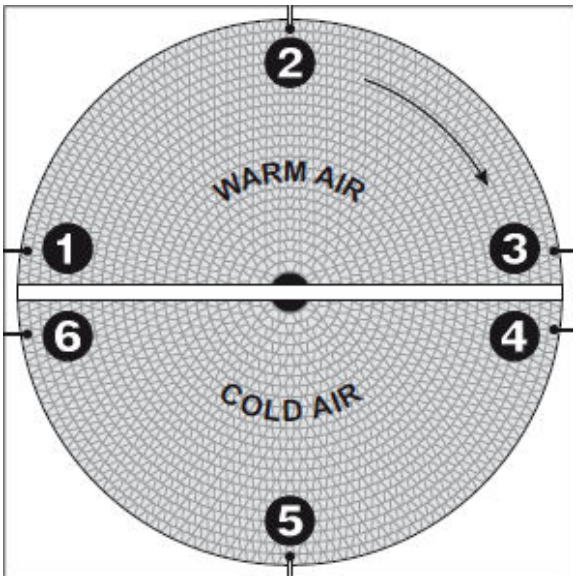

Fig. 4.2 Concept of Heat Transfer Through Wheel

1) Warm Air Entry

The wheel rotating at a speed of up to 20 rpm, the air channel has entered from the cold air into the warm air. The storage mass has been cooled down nearly to the cold air temperature. This applies particularly on the cold air inlet side (= warm air outlet). Now warm air flows through this channel, in counter-flow as regards temperature, and is severely cooled in this process. In turn, the storage mass is heated. The local heat recovery efficiency, i.e. directly at the entry into warm air, is very high. Condensation can occur easily.

2) Mid Warm Air

This air channel has already passed half of its time in the warm air. The storage mass has become warmer due to the arm air flow; consequently the warm air is no longer cooled as severely as in the entry zone. The channel temperature is about the same on the inlet side and on the outlet side. Condensation occurs only if the humidity differential is great.

3) Warm Air Exit

The air channel is on the verge of leaving the warm air. On the inlet side it has nearly reached the temperature of extract air. The heat transfer rate is now low. The duration of stay in the warm air as well as in the cold air, i.e. the speed of rotation, is decisive for the performance of the rotary heat exchanger. Also, the performance depends on the storage mass (thickness, geometry), the heat transfer and the air velocity.

4) Cold Air Entry

After pass over from the warm air side to the cold air side, cold air now flows through the channel (in counter-flow as regards temperature). Due to the large temperature difference the heat transfer rate is very high, i.e. the cold air is strongly heated; in turn, the storage mass is severely cooled. Possible condensate on the exchanger surface is (partly) taken up by the heated cold air.

5) Mid Cold Air

Half of the dwell time in the cold air is over. The storage mass has become markedly colder. Temperatures at the inlet and at the outlet are about the same.

6) Cold Air Exit

The air channel has gone through the cold air zone. The storage mass has been severely cooled; near the inlet the temperature has almost reached the temperature of cold air. After cross-over to the warm air side the cycle starts anew.

4.2.2 Moisture Transfer

Rotary heat exchangers can transfer moisture as well as heat. The decisive criterion for the transfer of moisture is the material or surface of the storage mass. The metallic storage mass has a capillary surface structure due to chemical treatment (pickling). Therefore (to a certain degree) moisture is transferred by sorption, i.e. without condensation. Depending on the air conditions, condensation may also occur.

4.3 CONSTRUCTION

A rotary heat exchanger consists of a rotor, a casing and an actuator.

4.3.1 Rotor

The rotor is assembled from alternate layers of flat and corrugated thin sheet aluminium. The smooth channels formed by this construction ensure that the flow is laminar, thereby ensuring that the drop is low and minimising the risk of fouling by dirt or dust. Dry particles up to 900 microns shall pass freely through the rotor without clogging the media. The rotor media can be cleaned with low temperature steam

The depth of the rotor is 200 mm. The wheel is strengthened by means of double spokes, which are bolted (and welded) in the hub and welded in the rotor shell ensuring a long life span. At the perimeter the rotor is enclosed by a welded aluminium shell, ensuring true running and allowing maximum use of the wheel face area.

Fig. 4.3 Rotor Strengthen by Double Spokes

4.3.2 Casing

Construction of casing depends on the size of the rotor. Casings are fabricated by using metal sheets. Casing may be single unit or partitioned. Casing supports rotor bearing with the help of the cross members and struts. It also encloses the motor unit.

Fig. 4.4- Sheet Steel Casing

4.3.3 Drive

The wheel is driven by means of an electric motor and a drive belt. The motor is usually fixed on a hinged plate in the casing. Drive provided can be constant or variable. Performance control (i.e. a variation of the heat or moisture recovery efficiency) is not possible in constant drive. In variable drive system, the rotor speed is varied as per room temperature. This is achieved by means of cascaded controllers which use rotary heat exchanger as energy resource in heating as well as cooling operation.

4.4 Enthalpy Wheel Desiccants

- Lithium Chloride: Salts dissolve, wash off.
- Silica Gel: Best water transfer characteristics.
- Molecular Sieves: Can be engineered to discriminate between species. Ideal for many process applications

4.5 Performance Control

Rotary heat exchangers always operate as a temperature moderator between the two air streams. The direction of the heat transmission is of no consequence, i.e. depending on the temperature difference between extract air and fresh air either heat or cool recovery takes place. Therefore performance control of the rotary heat exchanger is not necessary when the extract air temperature is identical with the desired room temperature. In this case, the fresh air is always either heated or cooled through the heat exchanger in the direction of the set temperature.[3]

In many cases, however, heat gains are present in the ventilated space (people, machinery, lighting, solar, process plants), which increase the room temperature, so that the extract air temperature is higher than the set temperature. In this case, at full performance of the heat exchanger, check at which outside temperature heat-up begins and if this cannot be tolerated the performance of the heat exchanger must be controlled.

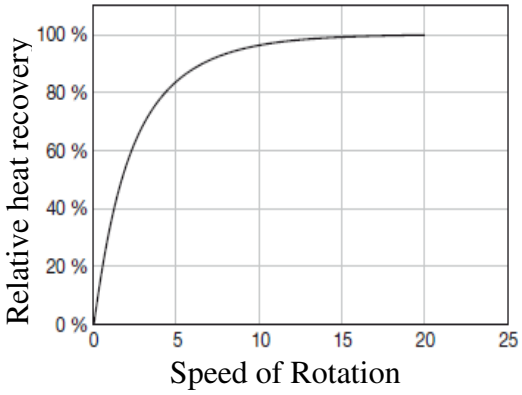

Fig. 4.5- Performance of a Rotary Enthalpy Wheel

4.6 Maintenance

As with any building systems and particularly air handling systems, proper maintenance will be essential to the successful function of the space.

Nowhere is this more evident than in the hospitality environment where ETS is present. The need for maintenance should be considered in the system design and equipment selection. A positive feature of all current enthalpy wheels is that they exhibit laminar flow within the heat and moisture exchange surface. (Packed bed and mesh type wheels exhibit turbulent .generally specified for comfort conditioning applications.)[4] In addition, the transfer of water into and out of the desiccant surface occurs in the vapour phase; no wet surfaces are presented to the airstream. As a result, the wheel surfaces do not act as an impact filter and particulate matter small enough to enter the wheel will pass through. Larger particles (lint, etc.) which may impact on the wheel face, are generally removed by the counter flowing airstreams. This feature means that, with respect to accumulation of dry particulate matter, enthalpy wheels require less maintenance than other air handling components.

ETS is comprised of a variety of compounds, particles, gases and vapours including tars, phenols, and other substances22 that condense out of the airstream and coat the surfaces of air handling equipment, including enthalpy wheels. This understanding has implications for system design and product selection as well as operation. All the air handling ductwork and components serving a smoking area are exposed to semi-volatile components of ETS that condense on surfaces. Because they contain so much surface area, filters, coils and heat exchangers can become significant sources of odour as these compounds re-evaporate into the air. Thus enthalpy wheels, like permanent filters and coils, need to be cleaned on a schedule commensurate with the loading in a given environment. In addition, in the case of the enthalpy wheel, a coating of tar and other compounds will inhibit the transfer of water molecules on and off the desiccant coated heat exchange surface, reducing latent effectiveness. In order to recover and maintain latent effectiveness, the enthalpy wheel must be cleaned on a regular basis.

Electron micrograph photos of a suitable enthalpy wheel surface, before and after washing with soap and water, demonstrate that significant loss of desiccant and therefore of latent capacity do no occur

4.7 Advantages

- These wheels are quite compact and can achieve high heat transfer effectiveness.
- Heat wheels have a relatively low air pressure drop, typically 0.4 to 0.7 in. of water.
- Freeze protection is not an issue.
- The cooling or heating equipment size can be reduced in some cases.
- Heat wheels typically have a sensible effectiveness of 50% to 80% and a total effectiveness of 55% to 85%.

4.8 Disadvantages

- Adds to the first cost and to the fan power to overcome its resistance.
- Requires that the two air streams be adjacent to each other and requires that the air streams must be relatively clean and may require filtration.
- Requires a rotating mechanism that requires it be periodically inspected and maintained, as does the cleaning of the fill medium and any filtering of air streams.

4.9 Applications

- Where lower relative humidity is an advantage for comfort or process reasons, the use of an enthalpy wheel pipe can help. An enthalpy wheel used between the warm air entering the cooling coil and the cool air leaving the coil transfers sensible heat to the cold exiting air, thereby reducing or even eliminating the reheat needs. Also the enthalpy wheel heat pre-cools the air before it reaches the cooling coil, increasing the latent capacity and possibly lowering the system cooling energy use.
- Projects that require a large percentage of outdoor air and have the exhaust air duct in close proximity to the intake can increase system efficiency by using a heat wheel to transfer heat in the exhaust to either pre-cool or preheat the incoming air.

4.10 Implimentations

- HOVAL ROTARY HEAT EXCHANGERS provides enthalpy wheels as the solution for the recovery of heat in HVAC systems.
- Pelican PRO green air HP of ENERVENT uses enthalpy wheels as the heart of the system.

V. CASE STUDY

5.1 Hospitality Case Studies

There are numerous hospitality applications of energy recovery ventilation systems in operation today, confirming the utility of these systems in resolving equipment cost and operating cost issues while addressing the ventilation performance and occupant comfort needs of the space. Several notable examples are referenced here:

The Hitching Post food and beverage concession at the Richmond Airport sought to satisfy both smokers and non –smokers in order to maximize return from the airside location convenient to departure gates. Directional airflow, a conservative (higher) ventilation rate of 60 cfm per person (as for smoking lounges), enthalpy recovery and documented commissioning and maintenance procedures combined to

produce a space that accommodates both smokers and non-smokers while maintaining humidity control.[5][7]

The dining room and lounge at the Coral Reef Yacht Club in Coconut Grove, Florida used an enthalpy recovery ventilation accessory for a standard rooftop HVAC unit in conjunction with airflow distribution modifications to resolve a smoke and odour problem. Life cycle cost analysis of the system options showed that energy recovery saved 30% of the cost of a conventional system to upgrade the ventilation.

Operating savings were estimated at between $3000 and $4000 annually. The new Sunset Station Hotel and Casino in Las Vegas, Nevada utilizes a central station air handler with 100% outside air and heat recovery to make their smoking permitted casino smell and feel like a non-smoking facility. The system performance is enhanced with highly efficient filtration and plug flow (displacement) ventilation. This system utilizes a plate type heat exchanger due to the dry Las Vegas climate, but an enthalpy wheel would be substituted in a hot humid climate application. A building automation system continuously monitors outside air and pressurization by staging the air handler fans.

VI. COMPARISION WITH OTHER EXISTING SYSTEMS

- Heat pipe should be heavily insulated at central portion to prevent heat transfer while no insulation is necessary in case of the rotary enthalpy wheel.
- Thermo siphons must be mounted such that vapour rises up and liquid flows down to the boiler with no bends in the tubing for liquid to pool. There is no question of alignment (gravity assistance) in case of enthalpy wheels.
- In both heat pipes and thermo siphons additional fans are necessary for proper heat transfer at both the ends.
- Working fluid is required to be maintained on its boiling point at given pressure in both heat pipes and thermo siphons. But here no separate working fluid is used.
- Both above mentioned devices work only on sensible heat. On the other hand enthalpy wheel works on sensible as well as total heat.
- The advantage of both systems over enthalpy rotary wheel is absence of any moving part.

Table: 6.1 Comparison of Enthalpy Wheel with other Existing Systems

Parameter	Enthalpy Wheel	Heat Pipe	Thermo siphon HE
Heat Transfer	Sensible + Total	Sensible	Sensible
Special Working Fluid	Not Required	Required	Required
Insulation	Not Required	Heavily Insulated at Centre	Heavily Insulated at Centre
Gravity Assisted Alignment	Not Required	Not Required	Required
Additional Fans at Working Ends	Not Required	Required	Required
Temp. of Working Fluid	No Requirement	Has to maintained at BP at given Pressure	Has to maintained at BP at given Pressure
Compensation of change in outside temp.	Rotor Speed	Pressure of Working Fluid	Pressure of working fluid
Moving Parts	Present	Absent	Absent

VII. CONCLUSIONS

- Rotary enthalpy wheel technology can be used where there is variation in temperature difference between exhaust and intake air. Because by varying the rotor speed performance of enthalpy wheel can be adjusted as per temperature difference.
- As its working is not affected by gravity, thus it overcomes the problem of alignment faced by thermo siphons.
- Total effectiveness up to 85% makes it best option for heat recovery systems in HVAC applications.

REFERENCES

[1]. ASHRAE, 1999. "ASHRAE Standard 62- 1999,Ventilation for Acceptable Indoor Air Quality", American Society of Heating, Refrigerating and Air-conditioning Engineers, Inc., Atlanta, GA

[2]. ASHRAE, 1989. "ASHRAEIANSI Standard 62-1989, Ventilation for Acceptable Indoor Air Quality", American Society of Heating, Refrigerating and Air-Conditioning Engineers, Inc., Atlanta. GA

[3]. ASHRAE, 1981. "ASHRAE Standard 62- 1981, Ventilation for Acceptable Indoor Air Quality".

[4]. American Society of Heating, Refrigerating and Air-Conditioning Engineers, Inc., Atlanta, GABOCA 1998. "International Mechanical Code". International Code Council, Inc., Falls Church, VA

[5]. ASHRAE, 1999. "ASHRAEIIESNA Standard 90.1- 1999, Energy Efficient Design of New Buildings Except Low-Rise Residential Buildings", American Society of Heating, Refrigerating and Air-conditioning Engineers, Inc.. Atlanta, GA

[6]. ASHRAE, 199 1. "ASHRAE Standard 84- 199 1, Method of Testing Air-to-Air Heat Exchangers", American Society of Heating. Refrigerating and Air-conditioning Engineers, Inc., Atlanta, GA

[7]. ARI, 1997. "ARI Standard 1060-1997. Rating

[8]. Air-to-Air Energy Recovery Ventilation Equipment", Air-Conditioning & Refrigeration Institute, Arlington, VA

CODING TECHNIQUES FOR ANALOG SOURCES

Prof.Pratik Tawde

Lecturer, Electronics and Telecommunication Department, Vidyalankar Polytechnic,Wadala

ABSTRACT

Image Compression is a process of removing redundant pixels from an image. There are various Image Compression Techniques available. Predictive Coding is one of the basic Image Compression Techniques. In Predictive Coding Pulse-code modulation (PCM) is a basic technique for image compression. In case of PCM the rate of the bit stream is simply reduced by removing a fixed number of least significant bits from each codeword so PCM coding technique is extremely simple but it has a poor coding efficiency. Another Predictive Coding technique is known as the differential pulse code modulation (DPCM).

Keywords: Predictive Coding, JPEG, DPCM and Complexity

I. INTRODUCTION

Images and videos are moved around the World Wide Web by millions of users almost in a nonstop fashion, and then, there is television (TV) transmission round the clock. This process of reducing the image and video data so that it fits into the available limited bandwidth or storage space is termed data compression. Data compression refers to the process of reducing the digital source data to a desired level and bandwidth compression refers to the process of reducing the analog bandwidth of the analog source. Today, most signals of interest (e.g., voice, audio, image, video) are digitally acquired (digitized) using A/D converters. A/D converters perform pulse-code modulation (PCM) with uniform quantization and fixed-length binary coding.

1.Temporal waveform coding 2.Spectral waveform coding 3.Model-based coding

Temporal Waveform Coding- In this type of encoding, the source encoder is designed to represent digitally the temporal characteristics of the source waveform.

Spectral Waveform Coding- The signal waveform is usually subdivided into different frequency bands, and either the time waveform in each band or its spectral characteristics are encoded for transmission.

Model-based coding- It is based on a mathematical model of the source.

II. OPTIMUM QUANTIZATION

Quantization of the amplitudes of the sampled signal results in data compression, but it also introduces some distortion of the waveform or a loss of signal fidelity.

2.1 Rate-Distortion Function R(D)

The minimum rate in bits per source output that is required to represent the output X of the memoryless source with adistortion less than or equal to D is called the rate-distortion function R(D).

Distortion of the general form:

$$d\left(x_k, \tilde{x}_k\right) = \left|x - \tilde{x}_k\right|^p$$

The distortion between a sequence of samples $X_n$and the corresponding quantized values $X_n^{\sim}$

$$D = E\left[d\left(X_n, \widetilde{X}_n\right)\right] = \frac{1}{n}\sum_{k=1}^{n} E\left[d\left(x_k, \tilde{x}_k\right)\right]$$

$$R(D) = \min_{p(\tilde{x}|x):E\left[d\left(X,\widetilde{X}\right)\right]\le D} I\left(X;\widetilde{X}\right)$$

$I\left(X;\widetilde{X}\right)$ is the average mutual information between X and $\widetilde{X}$. Note that R(D) decreases as D increases.

2.2 Theorem: Rate-Distortion Function for a Memoryless Gaussian Source

The minimum information rate necessary to represent theoutput of a discrete-time, continuous-amplitude memorylessGaussian source based on a mean-square-error distortionmeasure per symbol (single letter distortion measure) is:

$$R_g(D) = \begin{cases} \frac{1}{2}\log_2\left(\sigma_x^2/D\right) & \left(0 \le D \le \sigma_x^2\right) \\ 0 & \left(D > \sigma_x^2\right) \end{cases}$$

σ_x^2 is the variance of the Gaussian source output.

Rate-distortion function for a memoryless Gaussian source

- No information need be transmitted when the distortion $D \ge \sigma_x^2$.
- $D = \sigma_x^2$ can be obtained by using zeros in the reconstruction of the signal.
- For $D > \sigma_x^2$ we can use statistically independent, zero-mean Gaussian noise samples with a variance of $D - \sigma_x^2$ for the reconstruction.

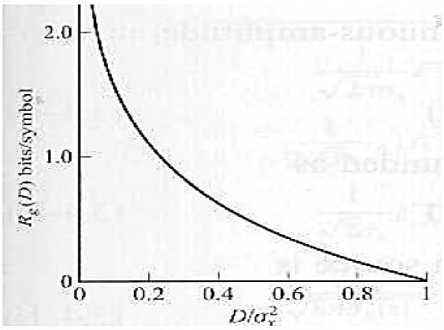

Distortion versus rate curves for discrete-time memoryless Gaussian source

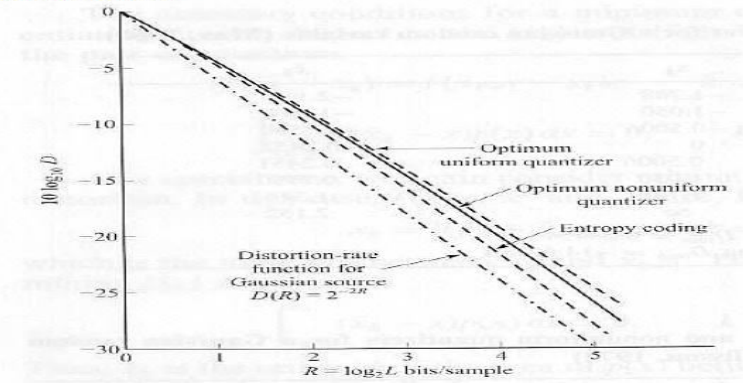

2.3 Temporal Waveform Coding

Time Domain Characteristics of signal can be represented by following popular methods.

1. Pulse Code Modulation (PCM)
2. Differential Pulse Code Modulation (DPCM)
3. Delta Modulation (DM)

2.4 Pulse Code Modulation (PCM)

A schematic diagram for Pulse Code Modulation is shown in Fig. 1

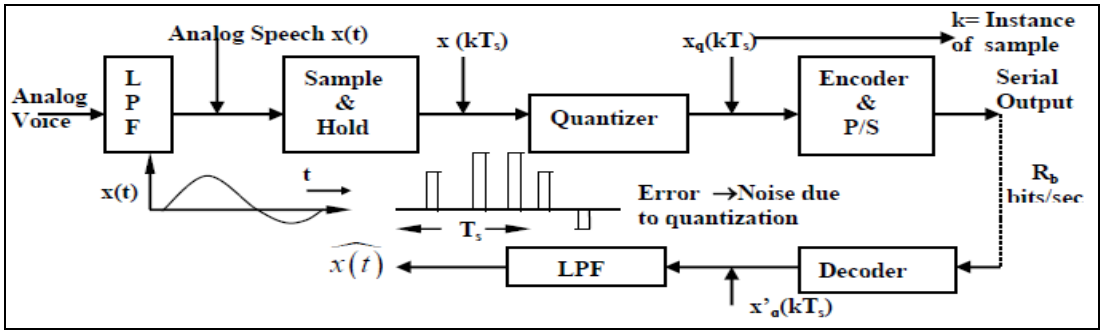

Fig.1 Schematic diagram of a PCM coder – decoder

- The signal is band limited by the low pass filter.
- Let X(t) denote the filtered signal to be coded. The process of analog to digital conversion primarily involves three operations:

  (a) Sampling of X(t),

  (b) Quantization (i.e. approximation) of the discrete time samples, X (kT_s) and

  (c) Suitable encoding of the quantized time samples $X_q(kT_s)$.Ts indicates the sampling interval where $R_s = 1/T_s$ is the sampling rate (samples /sec).A standard sampling rate for speech signal, band limited to 3.4 kHz, is 8 Kilo-samples per second (T_s = 125μ sec), thus, obeying Nyquist's sampling theorem.

2.5 Quantization

Quantization is an approximation process and thus, causes some distortion in the reconstructed analog signal. We say that quantization contributes to "noise".

- Below are Input / Output characteristics of Quantizer. The input signal range (± V) of the quantizer has been divided in eight equal intervals. The width of each interval, δ, is known as the step size. While the amplitude of a time sample x (kTs) may be any real number between +V and –V, the quantizer presents only one of the allowed eight values (±δ/2, ±3δ/2, …) depending on the proximity of x (kTs) to these levels.

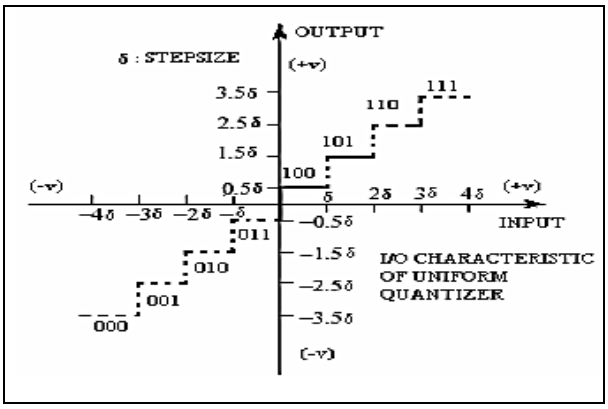

Fig 2 Input / Output Characteristics of Quantizer

- The quantizer of Fig 2 is known as "mid-riser" type. For such a mid-riser quantizer, a slightly positive and a slightly negative values of the input signal will have different levels at output. This may be a problem when the speech signal is not present but small noise is present at the input of the quantizer.

- To avoid such a random fluctuation at the output of the quantizer, the "mid-tread" type uniform quantizer Fig 3 may be used.

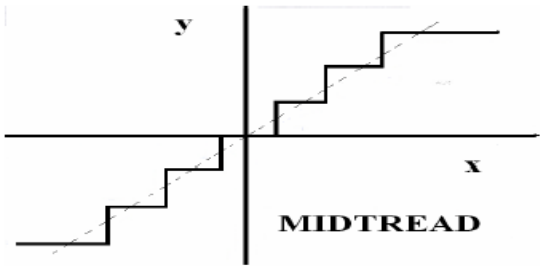

Fig 3 Mid-Tread Type Uniform Quantizer Characteristics

2.6 Encoding

Encoding is used to translate the Discrete set of sample values to more appropriate signal called Code. Suppose in binary code word 'n' bits are used, then we may represent 2^n. After coding binary signal is represented by train of pulses as NRZ , RZ unipolar or bipolar.

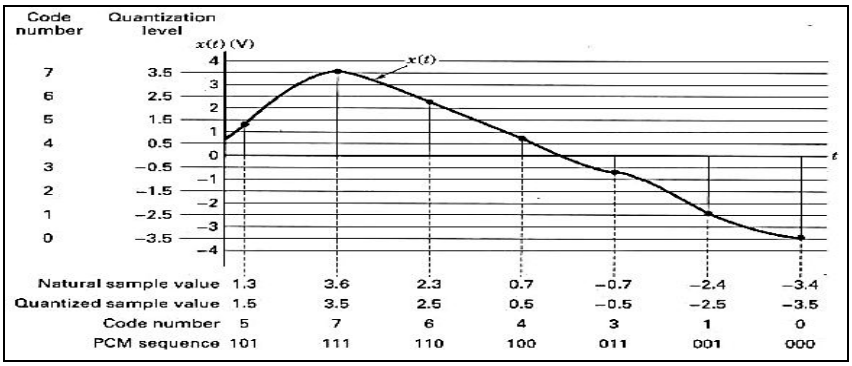

Fig 4 Natural Samples, Quantized Samples, and Pulse Code Modulation

- The PCM coded bit stream may be taken for further digital signal processing and modulation for the purpose of transmission.
- The PCM decoder at the receiver expects a serial or parallel bit-stream at its input so that it can decode the respective groups of bits (as per the encoding operation) to generate quantized sample sequence $[x'_q (kTs)]$.
- Following Nyquist's sampling theorem for band limited signals, the low pass reconstruction filter whose f_c = message BW is produces a close replica x̂(t) of the original speech signal x (t).

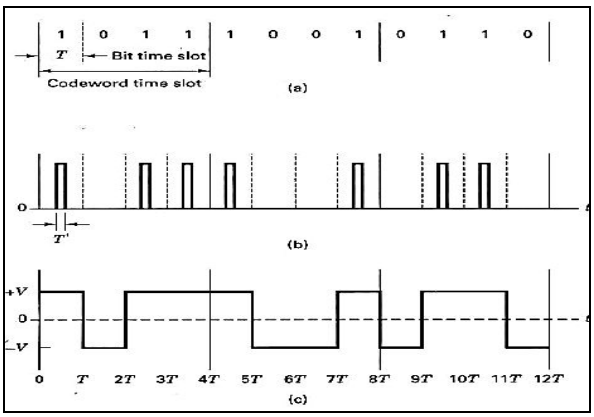

Fig 5 (a) PCM Sequence. (b) Pulse Representation of PCM.

(c) Pulse waveform (transition between two levels).

2.7 Multiplexing

- Different message sources are Time – Multiplexed for this receiver & transmitter are synchronized.

2.8 Channel Noise & Error Probability

The Performance of PCM system is influenced by two major sources of Noice.

1. Channel Noise: Introduced in transmission path
2. Quantizing Noise: Introduced in transmitter

2.9 Channel Noise

Due to Channel Noise Symbol '0' appears as '1' & Vice versa.

Probability of error $\mathbf{P_e=1/2 *erfc\ (1/2*(E_{max}/N_o)^{1/2})}$,Where No is noise power.

2.10 Quantizing Noise

Is produced at transmitter of PCM by rounding off analog sample value to nearby permissible level. Quantizing Noise $\sigma^2_Q = \Delta^2 / 12$,Where Δ is step size

2.11 Characteristics of PCM

- Average Probability of error depends on ratio of Peak Signal energy to Noise spectral energy.
- In PCM signal is regenerated so effects of amplitude , phase & nonlinear effects in one link has no effect on next link.
- Transmission requirement PCM link are independent of total length of system.
- PCM is very rugged system , means less noise effect unless noise amplitude is greater than half of pulse height.

Advantages: In PCM signal is regenerated so effects of amplitude, phase & nonlinear effects in one link has no effect on next link.Transmission requirement PCM link are independent of total length of system.

Disadvantages: High bit rate & noise limits the use.

III. DPCM

- In PCMSamples of signal are usually correlated as amplitude of signal does not change much ie signal is correlated or carries redundant information. This aspect of speech signal is exploited in differential pulse code modulation (DPCM) technique.

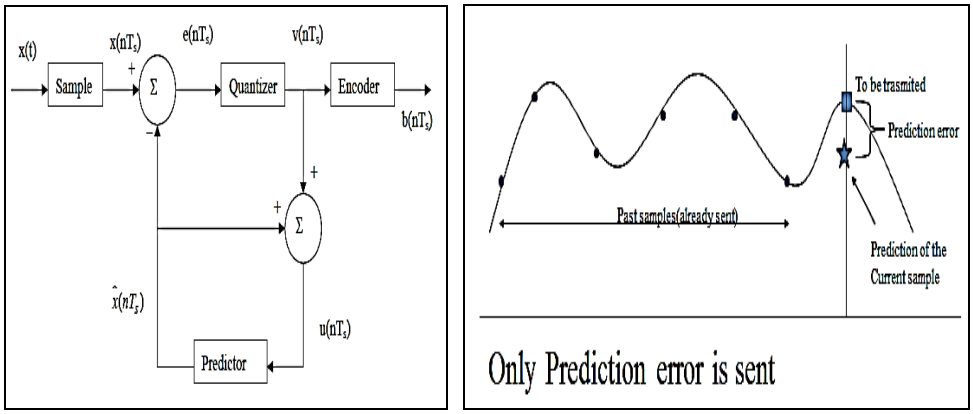

Fig.6 Schematic Diagram of a DPCM Modulator

- A schematic diagram for the basic DPCM modulator is shown in Fig 6 Note that a predictor block, a summing unit and a subtraction unit have been strategically added to the chain of blocks of PCM coder instead of feeding the sampler output x (kTs) directly to a linear quantizer. An error sample e_p (kTs) is fed.
- The error sample is given by the following expression:

$$\mathbf{e_p\ (nTs) = x\ (nT_s) - x\hat{}\ (nT_s)}$$

x^ (nT_s) is a predicted value for **x (nT_s)** and is supposed to be close to **x (nT_s)** such that **e_p (nTs)** is very small in magnitude **e_p (nTs)** is called as the 'prediction error for the nth sample'.

- We envisage smaller step size for the linear quantizer compared to the step size of an equivalent PCM quantizer. As a result, it should be possible to achieve higher SQNR for DPCM codecdelivering bits at the same rate as that of a PCM codec. There is another possibility of decreasing the coded bit rate compared to a PCMsystem if an SQNR as achievable by a PCM codec with linear equalizer is sufficient.
- A block schematic diagram of a DPCM demodulator is shown in **Fig 7**. The scheme is straightforward and it tries to estimateu(kT_s)using a predictor unit identical to the one used in the modulator. We have already observed that u(kT_s)is very close to x(kT_s) within a small quantization error of q(kT_s). The analog speech signal is obtained by passing the u^(kT_s)through an appropriate low pass filter.

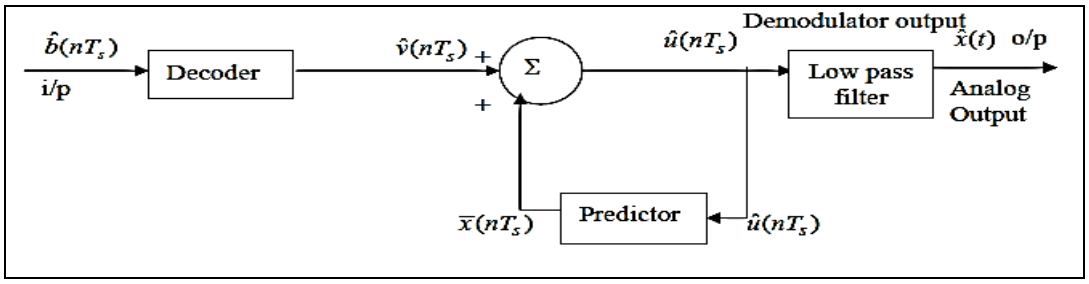

Fig 7 Schematic Diagram of a DPCM Demodulator

Advantages: Less bit rate generated so better utilization of bandwidth. Redundant information is less carried

Disadvantages: Predicator increase hardware complexity of system.

Delta Modulation (DM)

- If the sampling interval 'T_s' in DPCM is reduced considerably, i.e. if we sample a band limited signal at a rate much faster than the Nyquist sampling rate, the adjacent samples should have higher correlation . The sample-to-sample amplitude difference will usually be very small. So, one may even think of only 1-bit quantization of the difference signal. The principle of Delta Modulation (DM) is based on this premise.

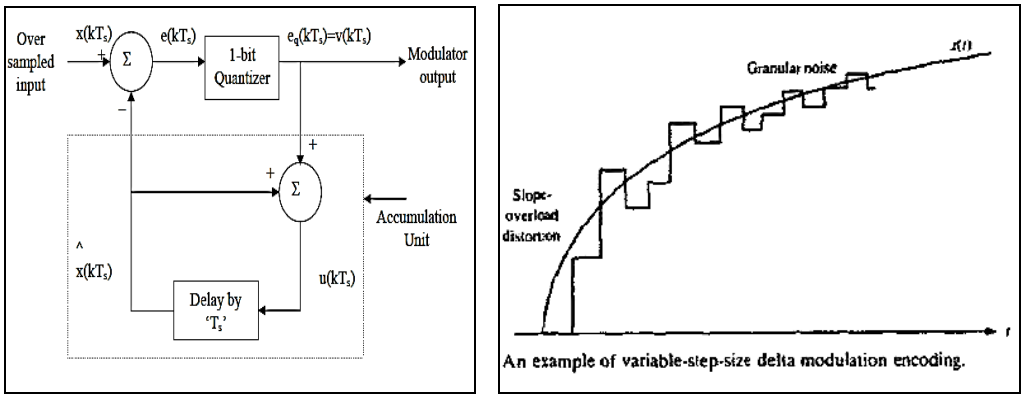

Fig. 8 Block Diagram of a Delta Modulator

- Delta modulation is also viewed as a 1-bit DPCM scheme. The 1-bit quantizer is equivalent to a two-level comparator (also called as a hard limiter). Fig.8 shows the schematic arrangement for generating a delta-modulated signal.
- Note that,

$$e(kTs) = x(kTs) - \hat{x}(kTs)$$
$$= x(kTs) - u([k-1]Ts)$$

3.1 Features of Delta Modulation

- No effective prediction unit – the prediction unit of a DPCM coder (Fig. 8) is eliminated and replaced by a single-unit delay element.
- A 1-bit quantizer with two levels is used. The quantizer output simply indicates whether the present input sample x(kTs) is more or less compared to its accumulated approximation *x^(kTs)*
- Output *x^(kTs)* of the delay unit changes in small steps.
- The accumulator unit goes on adding the quantizer output with the previous accumulated version *x^(kTs)* . .
- u(kTs), is an approximate version of x(kTs).
- Performance of the Delta Modulation scheme is dependent on the sampling rate.
- Most of the above comments are acceptable only when two consecutive inputsamples are very close to each other.

$$e(kT_s) = x(kT_s) - \{\hat{x}([k-1]T_s) + v([k-1]T_s)\}$$

Further,

$$v(kT_s) = e_q(kT_s) = s.sign[e(kT_s)]$$

Here, 's' is half of the step-size δ as indicated in Fig 9 below

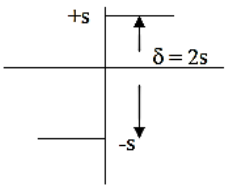

This diagram indicates the output levels of 1-bit quantizer. Note that if δ is the step size, the two output levels are ± s

Now, assuming zero initial condition of the accumulator, it is easy to see

$$u(kT_s) = s.\sum_{j=1}^{k} sign[e(jT_s)]$$

$$u(kT_s) = \sum_{j=1}^{k} v(jT_s)$$

Further,

$$\hat{x}(kT_s) = u([k-1]T_s) = \sum_{j=1}^{k-1} v(jT_s)$$

that

- Above eq. shows that is essentially an accumulated version of the quantizer output for the error signal e^(kt_s)- x^(kt_s) . also gives a clue to the demodulator structurefor DM. Fig. 10 shows a scheme for demodulation.

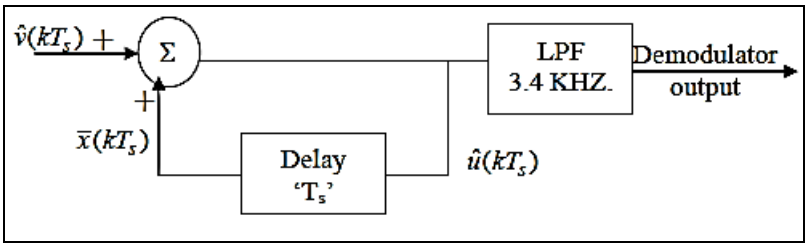

Fig.10 Demodulator Structure for DM

- The input to the demodulator is abinary sequence and the demodulator normally starts with no prior information about theincoming sequence.
- Now, let us recollect from our discussion on DPCM in the previous lesson that, u(kTs) closely represents the input signal with small quantization error q(kTs), i.e.
  $u(kT_s) = x(kT_s) + e(kT_s)$
- Next, from the close loop including the delay-element in the accumulation unit in theDelta modulator structure, we can write

$$u([k-1]T_s) = \hat{x}(kTs) = x(kT_s) - e(kT_s) = x([k-1]T_s) + q([k-1]T_s)$$

Hence, we may express the error signal as,

$$e(kT_s) = \{x(kT_s) - x([k-1]T_s)\} - q([k-1]T_s)$$

That is, the error signal is the difference of two consecutive samples at the input except the quantization error (when quantization error is small).

3.2 Advantages of a Delta Modulator Over DPCM

As one sample of x(kTs) is represented by only one bit after delta modulation,no elaborate word-level synchronization is necessary at the input of thedemodulator. This reduces hardware complexity compared to a PCM orDPCM demodulator. Bit-timing synchronization is, however, necessary if thedemodulator in implemented digitally.Overall complexity of a delta modulator-demodulator is less compared toDPCM as the predictor unit is absent in DM.

3.3 Limitations of DM:Slope Over Load Distortion

If the input signal amplitude changes fast, the step by step accumulation process may not catch up with the rate of change as shown in Fig 10.

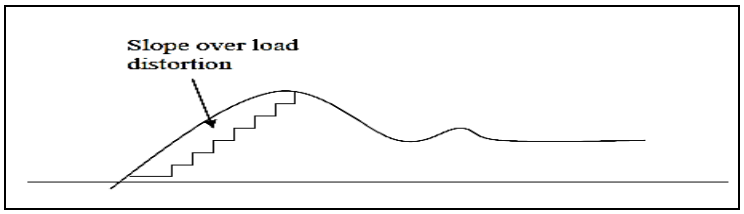

Fig 11 Slope-Overload Problem

- An intuitive remedy for this problem is to increase the step-size δ but that approach has another serious problem given below.

3.4 Granular Noise

If the step-size is made arbitrarily large to avoid slope-overload distortion, it may lead to 'granular noise'. Imagine that the input speech signal is fluctuating but very close to zero over limited time duration. This may happen due to pauses between sentences or else. During such moments, our delta modulator is likely to produce a fairly long sequence of 101010…., reflecting that the accumulator output is close but alternating around the input signal. This phenomenon is manifested at the output of the delta demodulator as a small but perceptible noisy background. This is known as 'granular noise'.A more efficient approach of adapting the step-size, leading to Adaptive Delta Modulation (ADM) ,

3.5 Condition for Avoiding Slope Overload

We may observe that if aninput signal changes more than half of the step size (i.e. by 's') within a samplinginterval, there will be slope-overload distortion. So, the desired limiting condition on theinput signal x(t) for avoiding slope-overloading is,

$$\frac{dx(t)}{dt}\Big|_{\max} \le \frac{s}{T_s}$$

3.6 Comparison in PCM, DPCM & DM

Characteristics	PCM	DPCM	DM
Principle	Each discrete sample is quantized, encoded & sent.	Difference between consecutive samples is quantized, encoded & sent.	Sampling rate > Nyquist sampling rate so ample-to-sample amplitude difference is very low about 1-bit quantizationwhich is encoded & send
Redundant Information	Carries redundant information.	Carries Less redundant information.	Carries high redundant information than PCM.
Bit rate generated	Higher compare to DPCM	Very Low compare to PCM	Higher than PCM
No. of Quantization levels.	High compare to DPCM , DM	Less compare to PCM	Less compare to DPCM, PCM
Quantization Noise	High compare to DPCM	Less compare to PCM, DM	High compared to PCM , DPCM due to step size called as Slope overload error & Granular Noise
Predictor Requirement	No	Yes	No, instead single Delay element is used.
Advantages	In PCM signal is regenerated so effects of amplitude, phase &	Less bit rate generated so better utilization of bandwidth.	Due to one bit quantization, no elaborate word-level

	nonlinear effects in one link has no effect on next link.		synchronization is necessary at the input of the demodulator. This reduces hardware complexity compared to a PCM or DPCM demodulator.
	Transmission requirement PCM link are independent of total length of system.	Redundant information is less carried	Overall complexity of a delta modulator-demodulator is less compared to DPCM as the predictor unit is absent in DM.
Disadvantages	High bit rate & noise limits use	Predicator increase hardware complexity of system.	Higher Quantization noise compared to PCM ,DPCM
Application	Telephone Speech	Video Chatting on internet.	Video streaming

IV. CONCLUSION

Analog source encoding methods are divided into three types. Temporal waveform coding, Spectral waveform coding ,Model-based coding.The minimum rate in bits per source output that is required to represent the output X of the memory less source with a distortion less than or equal to D is called the rate-distortion function R(D). Note that R(D) decreases as D increases.PCM is very rugged system, means less noise effect unless noise amplitude is greater than half of pulse height.In DPCM Less bit rate generated so better utilization of bandwidth.DM reduces hardware complexity compared to a PCM or DPCM demodulator.

REFERENCES

[1] Digital Communication by Simon Hykin
[2] NPTEL notes.
[3] Digital Communication by John Proakis

THREE TIER AUTO SECURITY SYSTEM

Prateek Gambhir[1], Dr. Sukhwinder Singh[2]

[1]Student (U.G), [2]Supervisor, Department of Electronics and Electrical Communication Engineering
PEC University of Technology, Chandigarh, (India)

ABSTRACT

Enclosed in this document is the detailed description of the working of an auto security system using RF (Radio Frequency) for locking and unlocking and an RFID (Radio Frequency Identification) based engine immobilizer using National Instruments' LabVIEW.

Keywords: RFID, RF, LabVIEW, VISA

I. INTRODUCTION

Security is an important aspect to be considered in automobile design. Here, an attempt has been made to enhance the already existing methods and designs of auto security. RF is used to send bits of continuously changing code to the receiver in the automobile, further, an RFID system is used as an appendage to the engine immobilizer.

II. RELATED WORKS

Maruti cars are equipped with iCAT - Intelligent Computerized Anti-theft System - essentially a device which communicates with the ECU (electronic Control Unit) of the car to disable the ignition and render the car immobilized if you fail to use the factory supplied keys. Your car keys use a RFID (Radio Frequency Identification Device) which transmits a unique factory assigned code to the key fob of the car which in turn, enables the ECU. Any other key or locally made key will not have the RFID and the unique code which will disable the ECU. KeeLoq is a proprietary hardware-dedicated block cipher in which "code hopping" encoders encrypt a 0-filled 32-bit block with KeeLoq cipher to produce a 32-bit hopping code.

III. RF

Radio frequency (RF) is a rate of oscillation in the range of around 3 kHz to 300 GHz, which corresponds to the frequency of radio waves, and the alternating currents which carry radio signals. RF usually refers to electrical rather than mechanical oscillations.

IV. RFID

Radio-frequency identification (RFID) is the wireless use of electromagnetic fields to transfer data, for the purposes of automatically identifying and tracking tags attached to objects. The tags contain electronically stored information. Some tags are powered byelectromagnetic induction from magnetic fields produced near the reader. Some types collect energy from the interrogating radio waves and act as a passive transponder. Other

types have a local power source such as a battery and may operate at hundreds of meters from the reader.

V. HARDWARE

1. 433MHz RF Module
2. 125KHz RFID Reader
3. PL 2303
4. Keyswitch

VI. WORKING

RF transmitter is used to send a 5 byte rolling code to the transmitter fitted in the automobile, a 433MHz module is used. This is the first tier. Further an RFID tag and reader combined with a keyswitch is used in conjunction with the engine immobilizer, this is the second tier. Finally, the third tier is LabVIEW interfacing i.e a master key is embedded in the receiver of the RF module for unlocking the automobile.

The RFID reader is connected to the Rx to PL2303 and Tx of PL2303 is connected to Atmega8. The bytes received by PL2303 are read by LabView

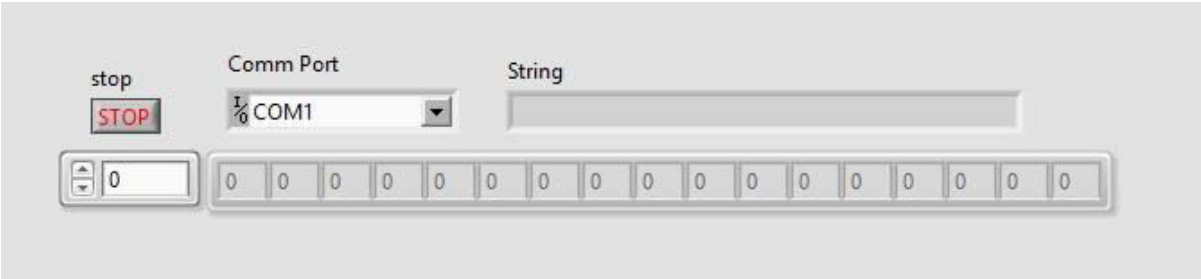

This is the block diagram and specifies the characteristics of received data ie 9600 baud rate and 1 stop bit. It also stores the data into a string and an array of unsigned 8 bit numbers.

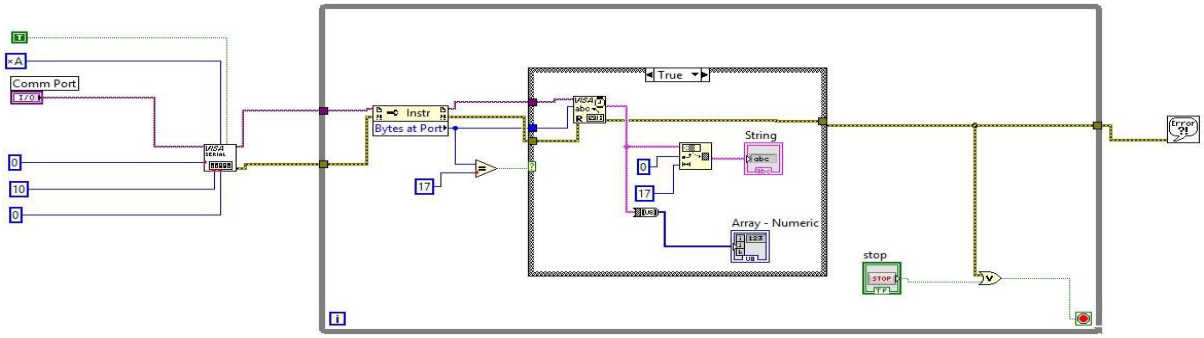

Finally, this is the block diagram of a VI which generates a email and sends it to a user from a system defined email id on gmail if a wrong keytag is used:

 ISBN: 978-81-931039-4-4

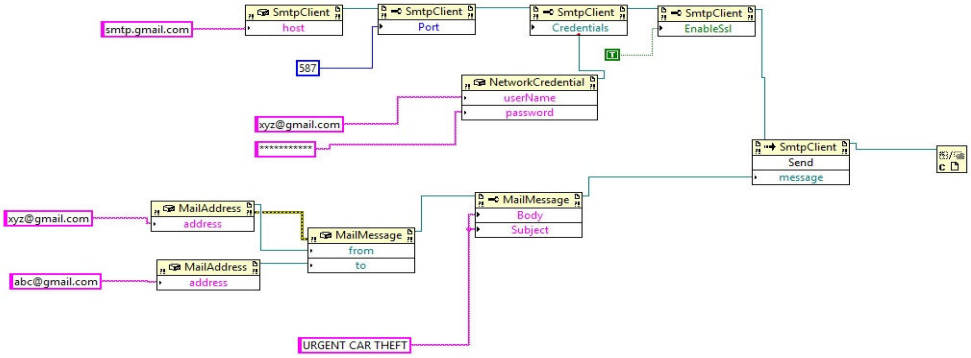

VII. CONCLUSION

In this modern world of rapidly changing technology, it is imperative for one to have a sound and highly secure auto security system. The cost of installing such a system is a small price to pay for the safety and security of your automobile. The three tiers of automobile security illustrated here provide a fail safe mechanism for automobile security and also alert the owner of the automobile to any attempts at break-ins.

VIII. FUTURE SCOPE

This system can further be improved by using better hardware and faster processors to enable the designer to increase the encryption and complexity of the code so as to further reduce chances of jacking. In case of false keytags being used, a bluetooth and wifi module can be placed in the automobile so as to obtain the bluetooth or MAC address of the phone of the thief so as to implicate him.

REFERENCES

[1]. https://www.ni.com/visa/
[2]. http://www.ni.com/labview/
[3]. http://www.theautomotiveindia.com/forums/technical-zone/2037-how-marutis-icats-system-works.html
[4]. http://en.wikipedia.org/wiki/KeeLoq

 ISBN: 978-81-931039-4-4

CHARACTER RECOGNITION SYSTEM USING LabVIEW

Aniket Sirsikar[1], Dr. Sukhwinder Singh[2]

[1]*Undergraduate Student, Department of Electronics and Communication Engineering, PEC University of Technology, Chandigarh, (India)*

[2]*Supervisor, Assistant Professor, Department of Electronics and Communication Engineering, PEC University of Technology, Chandigarh, (India)*

ABSTRACT

The project acquires an input character from the user using a 4 wire resistive touch screen which is then processed in Lab VIEW to compare with the database of stored characters and the closest match is displayed.

Keywords: Character Recognition, LabVIEW

I. INTRODUCTION

Pattern recognition and character recognition is nowadays used to process data in touchscreen devices such as smartphones, tablets, etc. The system presented in this paper aims to recognize a character drawn on the touchscreen which is sent to a computer serially by an ATmega16 microcontroller. The input produced by the microcontroller is processed by LabVIEW which compares it with the database of stored characters using statistics and then displays the closest match .

II. RELATED WORKS

Character or Handwriting recognition software has been in use in mobile phones, tablet PCs for a long time. The first handwriting recognition system in a PDA came in 1993 in the Apple Message Pad. Since then several sophisticated algorithms have been developed that can recognize words at a time and produce accurate results.

III. HARDWARE

There are 4 components-

1. 4 wire analog resistive touchscreen
2. ATmega16 microcontroller
3. PL2303 USB to TTL converter
4. Computer equipped with LabVIEW

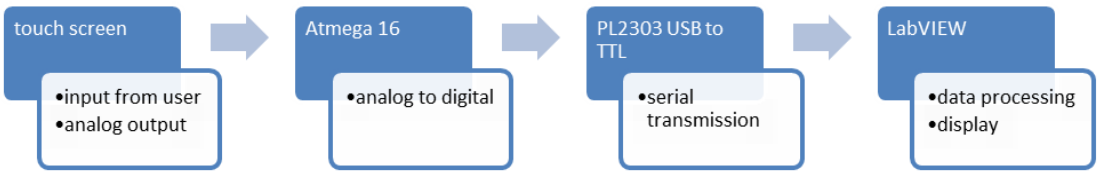

 ISBN: 978-81-931039-4-4

3.1 Touch Screen

It is a 2- Dimensional sensing device that is constructed of 2 sheets of material separated slightly by spacers. It contains a sheet of glass providing a stable bottom layer and a sheet of Polyethylene (PET) as a flexible top layer .The 2 sheets are coated with a metal compound called Indium Tin Oxide (ITO).When the PET film is pressed down, the two resistive surfaces meet. The position of a touch can be read by a touch screen microcontroller circuit.

3.2 ATmega16 Microcontroller

The microcontroller has been programmed to alternately do an Analog to digital conversion for X and Y coordinate of the point touched on the screen. After each conversion the value is transmitted digit by digit through UART (Universal Asynchronous Receiver Transmitter) of the microcontroller. The coordinates are sent in the format x1x2x3, y1y2,y3 followed by a new line character

IV. LABVIEW

It stands for Laboratory Virtual Instrument Engineering Workbench. It was developed to allow scientists and engineers to control instruments through computers using an easy to understand graphical programming language. LabVIEW has been used to serially acquire data using VISA libraries and then to plot and compare the input character with the database of characters.

V. MAIN VI

The main VI configures the serial port using controls setting the appropriate data bits, stop bits, baud rate and parity (not used). After the port has been configured it uses the VISA Read function to read data in every iteration of the while loop. In every iteration, it reads one set of coordinates, uses the Match Pattern function to separate the X and Y coordinates and stores them in separate arrays. These arrays are then clustered together and sent for plotting to the XY Graph. Each set of coordinates is 8 bytes, 6 for the numbers, 1 for the comma and 1 for a new line character at the end, so 8 bytes are read every iteration.

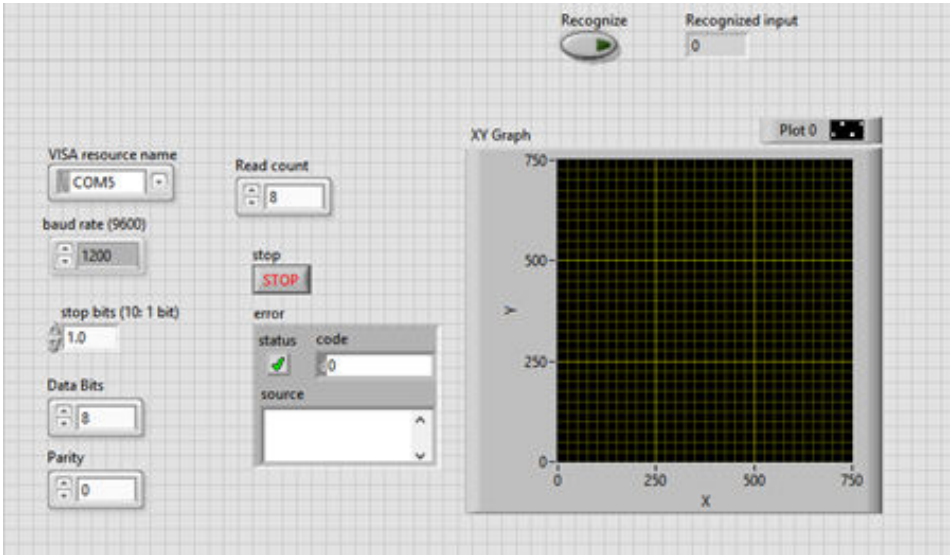

Fig 1 Front Panel of the Main VI

When the user has finished entering the character, he may press the Recognize button on the front panel to do the character recognition and display the recognized character. After the user presses the Recognize button, the Compare subVI is passed the X and Y arrays of the input character. It does the recognition and displays the output.

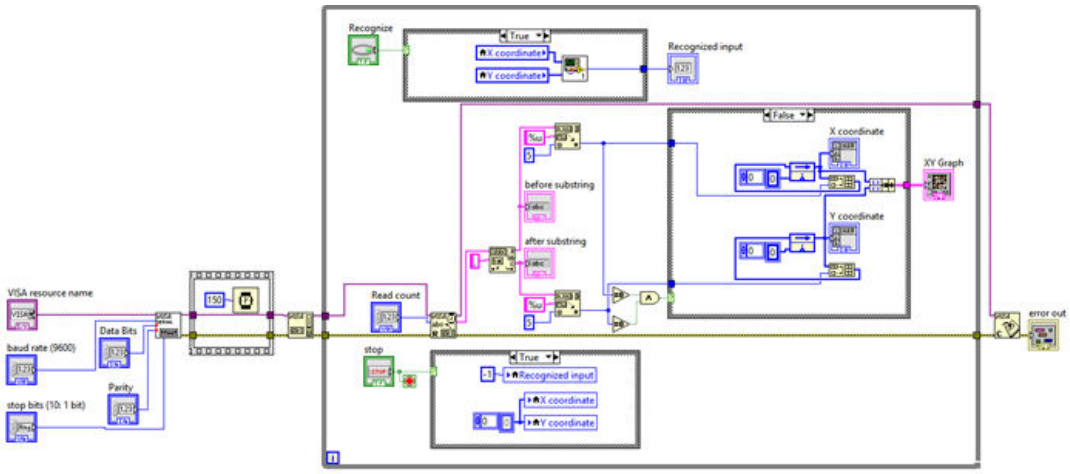

Fig 2 Block Diagram of the Main VI

VI. COMPARE SUBVI

The Compare subVI does the calculations for the recognition. It uses the Mean Absolute Deviation function of Statistics for doing the comparisons. Mean Absolute Deviations of difference of input arrays and stored arrays is calculated and compared. Mean Absolute Deviation of a data set tells us how far, on average, all values are from the mean value.

The mean absolute deviation of a set $\{x_1, x_2, ..., x_n\}$ is

$$\frac{1}{n}\sum_{i=1}^{n}|x_i - m(X)|.$$

$m(X)$ is the mean of the data set

It can be zero for difference of 2 curves if they are identically drawn on the screen irrespective of their locations. It will be non-zero and will increase as the 2 curves being compared get more different from each other.

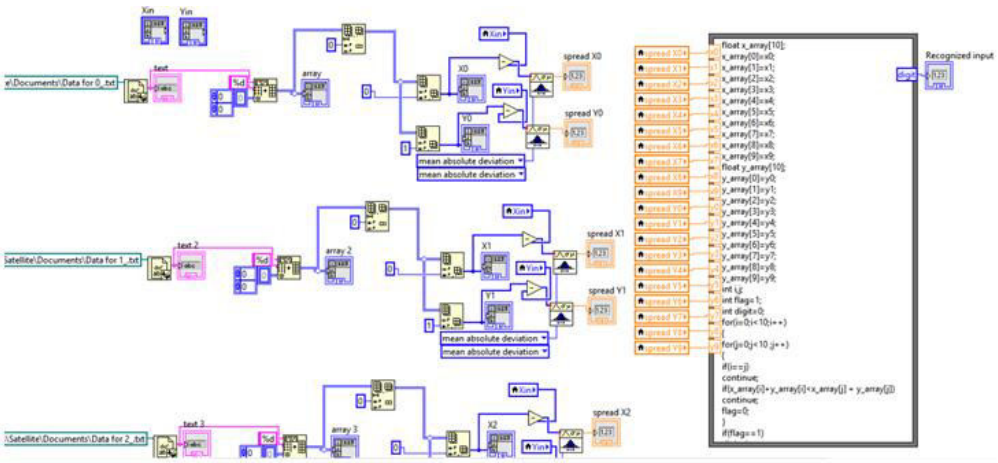

Fig 3 Block Diagram of the Compare subVI

The subVI has access to the database of characters which consists of a text file for each character. Each text file contains the X and Y arrays of the character in the database, with which the input character's X and Y arrays will be compared. The subVI calculates the Mean Absolute Deviations of the difference of the input and stored characters and then compares these values iteratively in a Formula Node to find the character with least deviations compared to all others in the database. This is taken as the closest match and is displayed as the Recognized input on the Front Panel of the main VI

VI. CONCLUSION

The accuracy of the character recognition system depends on the following:

1. The shape of the character in comparison to shape stored in the database. We got accurate results when the input was similar to the database. It was not a big constraint as characters did not have to be exactly the same for accurate results.
2. The speed at which the character was drawn when it was stored in the database. The speed has more influence on the accuracy as even if the same shape is drawn, but at a significantly different speed from the database, the result will be inaccurate.
3. While drawing on the touch screen, some points can appear randomly on the XY graph. If too many of these points appear, the accuracy will be decreased and results may not be as expected. These points may be due to noise in the ADC.
4. The baud rate plays a very significant role in deciding the error and speed of the data transmission.

So, if the speed at which the character is drawn and it's shape are similar to the character in the database, the results will be accurate most of the times.

VII. FUTURE SCOPE

It is possible to include many more characters in the database without affecting accuracy.

A more advanced version could be made which would be able to recognize a word of writing at a time.

It could also be used as pattern lock system for devices like mobile phones, PDAs, tablets PCs. A pattern to unlock the device would be stored in the database and if the input would match with that, the device would unlock.

REFERENCES

[1]. http://en.wikipedia.org/wiki/Average_absolute_deviation
[2]. https://www.sparkfun.com/datasheets/LCD/HOW%20DOES%20IT%20WORK.pdf
[3]. http://en.wikipedia.org/wiki/MessagePad
[4]. http://www.engineersgarage.com/contribution/expert/interfacing-4-wire-resistive-touchscreen-with-atmega-16-microcontroller