4th International Conference on Recent Innovations in Science Engineering and Management
India International Centre, New Delhi
20th March 2016, www.conferenceworld.in
(ICRISEM-16)
ISBN: 978-81-932074-6-8

B-BOT ASSISTED RESCUE SYSTEM FOR HUMAN SEARCH AND ACQUIRING CRITICAL MEDICAL PARAMETERS FOR EMERGENCY PURPOSE DURING DISASTERS

Majid Murtaza Noor[1], Er Seema Chawla[2], Dr Imtiyaz A Magray[3]

[1,2]Department of Biomedical Engineering, DCRUST Murthal Haryana (India)

[3]Government Dental College & Hospital Srinagar, J&K (India)

ABSTRACT

This paper presents the design and application of pyro metric sensor network prototyping system for tracking human search and rescue bio-robots.The B-Bot (Bio-robotic) system can navigate autonomously into rubbles and to search for living human body heat using thermal array sensor. The global system for mobile communication (GSM) network helps to track the location of the robot and sends the information to the rescue team through automatic call-dialer and alarm indicator. This system is capable to take necessary critical medical parameters(Heart rate, temperature, BP etc) of the injured/alive person detected to enhance his/her medical conditions. Design and development of the bio-robotic network system is described in this paper.

Keywords: Bio-Robot, Human detection, GSM technology, PIR sensors, Natural & Man-made disaster

I. INTRODUCTION

The unparalleled number and scales of natural and artificial disasters in the past has urged the emergency search and rescue community around the world to seek for naive, more effective equipment to enhance their efficiency. Search and rescue technology to-date still rely on old technologies such as search dogs, camera mounted probes, and technology that has been in service for decades. Intelligent robots equipped with advanced sensors are attracting more and more attentions from researchers and rescuer [1].

The B-Bot system is the novice way using the modern technology for rescue and medical emergency during disasters. It has been able to provide significant support to mankind by accomplishing arduous tasks that are apparently infeasible for human beings to perform.

The proposed embedded robotic system detects alive human body in the catastrophic environments which is very helpful for rescue operations and taking different medical parameters of a person stuck alive in the disaster. Disasters can be of two kinds- natural and human-induced. Natural disasters are not under the control of human beings. They include earthquakes, floods, storms, cyclone, fire etc. Besides natural disasters, an urban area is very susceptible human-induced disasters. They include industrial accidents, transportation accident, accidents during mining, warfare etc. Whatever may be the reason, during such calamities, various services are deployed

for rescue operations. In order to increase the probability of saving lives of the victim, the rescue operation needs to be faster. But, sometimes, it is difficult for rescue personnel to enter into some parts/areas of the disaster affected areas. In such circumstances, B-Bots have been proposed to be deployed to help them and to perform tasks that can be performed neither by rescue team nor by existing tools and techniques since decades. This paper proposes a mobile bio-robotic system which will work in complicated conditions. The proposed system uses PIR sensor to detect the motion of human body and IR sensor to detect any obstacle on the way of robot. Having detected the sign of living humans, the system sounds buzzer and the sensors trigger a call to the rescue/medical team. The triggered call will give the details of location of a trapped person and provide critical medical parametersfor taking initial precautions from medical team to help the trapped person.

The existing system suffered many problems like high cost to set up communication between robot and medical and rescue control unit, noisy wireless communication link between robot and control unit which ultimately stopped robot to function etc. The proposed system is able to solve all these problems.

1.1 Related work

The concept of enabling robots to detect and identify humans in domestic environment was absolutely new and lifesaving method.This work was done with the aid of Thermal and Visual Information sources that were integrated to detect humans and further processed to verify it [2].

Remote Operated and Controlled Hexapod (ROACH)[3]: ROACH is a six legged design that provides significant advantages in mobility over wheeled and tracked designs. It is equipped with predefined walking gait's camera's which transmit live audio and videos of the disaster site, as well as information about locations of objects with respect to the robot's position to the interface on the laptop.

Kohga: University of Tokyo - The most complicated task for most of the USAR robots has been working on a rough terrain. Specialized robots have been designed for these types of environments such as KOHGA the snake like robot [4]. The robot is constructed by connecting multiple crawler vehicles serially, resulting in a long and thin structure so that it can enter narrow space.

Various rescue robots have been developed and some of these are – CRASAR (Centre for Robot-AssistedSearch and Rescue): University of South Florida. This robot was used for first time in real conditions on 11th September 2001 in the World Trade Center disaster. Different sensors like millimeter wave radar for measuring distance, a color CCD camera for vision and a forward-looking infrared camera (FLIR) for the human heat detection are used in it.

Bahadori presented "Human Body Detection in the Robocop Rescue Scenario" an analysis of techniques that have been studied in the recent years for human body detection (HBD) via visual information [5]. The focus of his work was on developing image processing routines for autonomous robots operating for detecting victims in rescue environments.

II. PRINCIPLE

The design on a B-Bot system based on GSM technology to help the people on time which are trapped in natural & man-made calamities like warfare, earthquake, floods etc. It gives timely & accurately reflect dynamic situation of human in disaster region like in the underground regions to control room, so that rescue team of

ISBN: 978-81-932074-6-8

experts & doctors can reach to the victim's location for primary treatment and can be sent to the safe place or hospital. GSM network can solve the key issue of communication bandwidth, data transmission, real-time detection & so on. GSM is composed of a large number of micro-sensors nodes which have small volume, low cost, good compatibility & battery powered. The basics of calling feature through GSM is shown in fig 1.

With the use of the darlington transistors pair and relay operation, the mobile is accordingly coded on which we provide the GSM calling using dual tone multiple frequencies (DTMF).

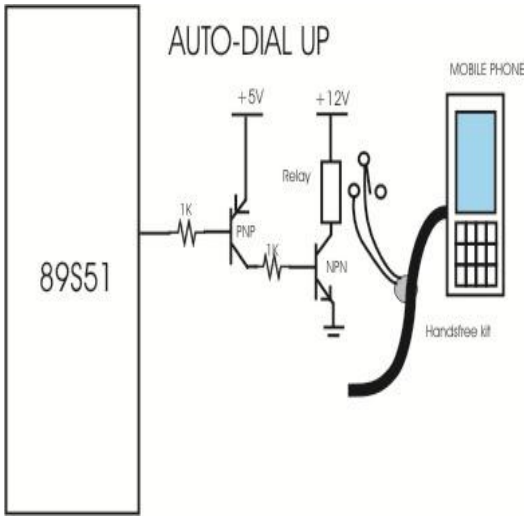

Fig 1: Automatic calling feature using GSM in B-Bot

III. WHAT IS PIR SENSOR

PIR sensors allow you to sense motion, almost always used to detect whether a human has moved in or out of the sensors range. They are small, inexpensive, low-power, easy to use and don't wear out. They are often referred to as PIR, "Passive Infrared", "Pyroelectric", or "IR motion" sensors shown in fig 2.

Fig 2: Actual module of the PIR sensor

ISBN: 978-81-932074-6-8

PIRs are basically made of a pyro electric sensor which can detect levels of infrared radiation. Everything emits some low level radiation, and the hotter something is, the more radiation is emitted. The sensor in a motion detector is actually split in two halves. The reason for that is that we are looking to detect motion (change) not average IR levels. The two halves are wired up so that they cancel each other out. If one half sees more or less IR radiation than the other, the output will swing high or low. System use sensing mechanism based on scanning pyro metric sensor.

3.1 Working of PIR sensor

The PIR sensor itself has two slots in it, slot is made of a special material that is sensitive to IR. The lens used here is not really doing much and so we see that the two slots can 'see' out past some distance (basically the sensitivity of the sensor), half of the PIR sensor, which causes a positive differential change between the two halves. When the warm body leaves the sensing area, the reverse happens, when the sensor is idle , both slots detect the same amount of IR, the ambient amount radiated from the room or walls or when the sensor is idle, both slots detect the same amount of IR, the ambient amount radiated from the room or walls or outdoors. When a warm body like a human or animal passes by, it first intercepts one whereby the sensor generates a negative differential change. These change pulses are what is detected as illustrated in fig 3.

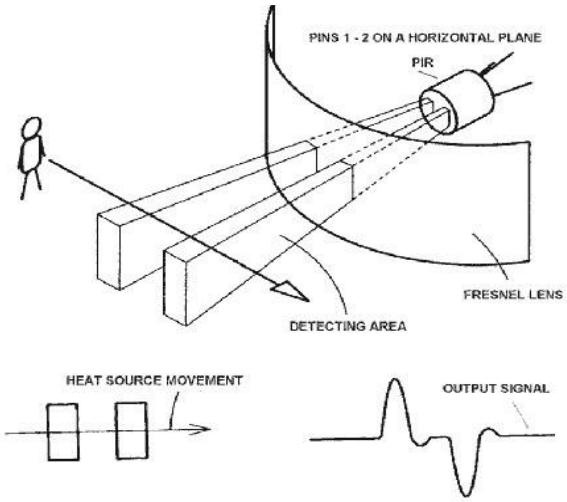

Fig 3: Working principle of PIR sensor

IV. BLOCK DIAGRAM OF THE B-BOT

This system consists of a robot section and control section. Furthermore robot section consists of a movable unit, which has GSM module with DTMF, an LCD display, PIR sensor mount on it and a microcontroller At89s51.

Control unit consists of a manual control mobile acting as a remote and call receiver to control the movement of the robot and gives the information of human detection.

The representation of design of bio robot is shown below in fig 4.

ISBN: 978-81-932074-6-8

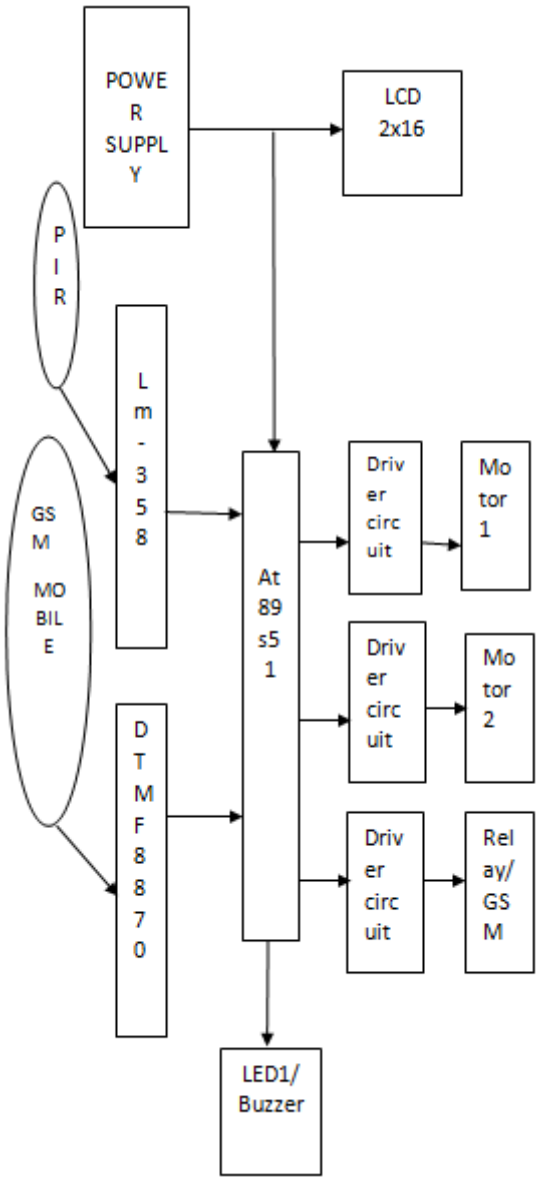

Fig4: Block diagram of B-Bot

4.1 System Implementation

As live human body emits thermal radiation it is received and manipulated by the PIR sensor to detect humans. Signals from PIR sensors are given to the microcontroller and this microcontroller will digitize the signal with DTMF controller and send it to the GSM module. GSM transceiver is used to send and receive data between robot and the control unit.The Robot we use here is a mobile controlled that can be moved in all the four directions with the transmitter section attached with it.

ISBN: 978-81-932074-6-8

V. FLOW CHART

When the PIR sensor detects a motion signal in its surrounding while navigation, then control program will start buzzer for alarm indication. If a human is detected in disaster area covered by mobile robot, then proposed system automatically starts auto-dialer to convey information to base station for rescue.

Fig 5 shows complete path of program & along with working of robot. When Mobile robot starts moving then continuously PIR sensor check for motion if motion is detected then buzzer gives a beep & then all the other sensors get ON, which takes other critical parameters from detected person for necessary action. The PIR sensor can detect motion in around 120°.

Detection of human body can be done at any situation, fast as well as extremely slow motion. Slow motion range is half meter per second and fast motion range is 3 m/s or 5m/s (18km/hrs.). The output of IR detector signal will respond in certain frequency range which is depend on focus of optical system and moving speed of human body, which is calculated by electronic circuitry. Thumb rule can be used for relation between velocities, focus and frequency. The range for signals will be 0.08 HZ to 8 HZ with typical Fresnel lens of 25mm focal length. Low frequency range is determined when movement of human in far distance from detector. And human movement is near to detector cause high frequency range.

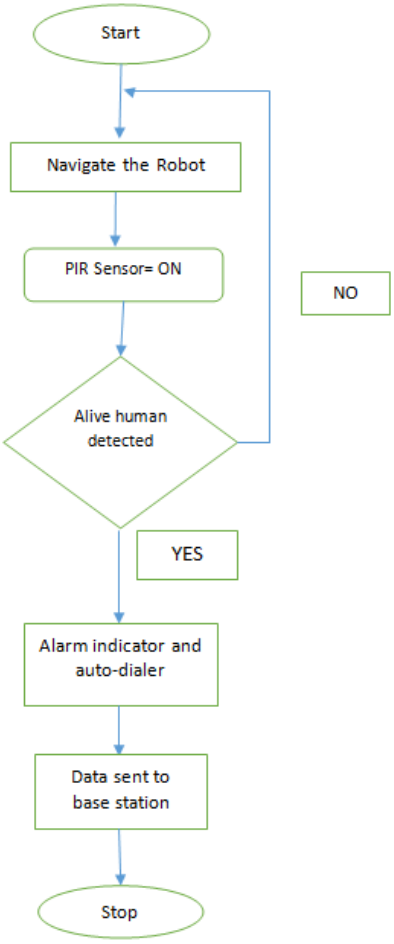

Fig 5: Operating flow chart

Human body emits the heat in the form of infrared rays. If human body enters in sensing area of sensor the IR infrared rays change the difference in temperature between human body and environment and sensor detects these changes in infrared rays caused by human body.

VI. APPLICATIONS

a) Robotic-medical surgeries and other biomedical studies.
b) In defense applications to detect the presence ofhuman being.
c) In Rescue operations where human reach is not possible.
d) Artificial intelligence and neural network applications,
e) Environmental waste management and many more.

VII. CONCLUSION

The objective of this work is to provide the robot with multiple features for the safety and rescue purpose during disasters.The robot is used for detection of humans stuck due to disasters and is capable to take all necessary medical parameters for the safety purpose. During detection the robot starts alarm indication and auto-dials the call to the base station or to rescue team for information.

GSM is used instead of CDMA which is highly secured and can't be easily jammed or tapped.

Despite the abundant sources of interferences, the test environment is far from practical for what this system is designed for. Long term work is to develop methods to evaluate accuracy of sensor network estimated position against actual position in obstructed environment, i.e. in rubble. This work would provide a base to compare and evaluate results of different control and tracking algorithms. In addition, technologies and methods that canhelp to setup the system quickly for emergency application and medico-robotic studies are another important area's to make the system truly applicable.

REFERENCES

Journal papers:

[1] Robot Assisted Emergency Search and Rescue System with a Wireless Sensor Network, Albert Ko and Henry Y. K. Lau, *International Journal of Advanced Science and TechnologyVol. 3, February, 2009*

[2] Mauricio Correa, Gabriel Hermosilla, Rodrigo Verschae, Javier Ruiz-del-Solar, (2012), "Human Detection and Identification by Robots using Thermal and Visual information in Domestic Environments", *J Intell Robot Syst (2012) 66:223-243*

[3] Chris Cappello, Chad Olsen, Mike Auen "Remote Operated and Controlled Hexapod (ROACH) *Robot, Rescue Robot League Competition Atlanta, Georgia, USA May 7 – 10, 2005.*

[4] Amerada, T., Yams, T., Igarashit, H., &Matsunos, F. "Development of the Snake-like Rescue Robot KOHGA" *IEEE, 2004, PP. 5081- 5086.*

[5] Bahadori, Shahram, Iocchi, Luca, "Human Body Detection in the RoboCup Rescue Scenario" Department of informatics, Rome Italy

[6] AfakSekmen, Ali S., Kawamura, Kazuhiko, and Wilkes, Mitch "An Application of Passive Human– Robot Interaction: Human Tracking Based on Attention Distraction*" IEEE, Vol. 32, No. 2, March 2002, PP. 248-259.*

[7] Research on human body detection methods based on the head features on the disaster scenes Systems and Control in Aeronautics and Astronautics *(ISSCAA), 2010*.

Books:

[8] The 8051 Microcontroller and Embedded Systems (2nd edition) Tata McGraw Hill by Muhammad Ali Mazidi, Janice G Mazidi, Rolin D.

[9] Operational Amplifiers and Linear IC's by David A Bell(2nd edition).Pearson,2004

AUTHORS

	**Majid Murtaza Noor** Majid Murtaza Noor is presently pursuing MTech in the Department of Biomedical Engineering DCRUST Haryana India. His research interests are Surgical Robotics, Medical Imaging Systems, Haptics, Tissue Regeneration, Artificial Intelligence and Designing.
	**Er Seema Chawla** She is presently working as Assistant professor in the Department of Biomedical Engineering DCRUST Haryana.. Her field of interests are robotics, Bioinstrumentation, Haptics
	**Dr Imtiyaz A Magray** He is presently working as Registrar in the Department of Prosthodontics, Govt. Dental College& Hospital Srinagar J&K. His field of interests are Implant Surgeries and Maxillofacial Prosthodontics.