MULTIPLE SECRETVISUAL CRYPTOGRAPHIC SCHEMES USING HALFTONE PATTERN

T.B.Yugendran[1], M. Logesh[2], N. Ezhilvaluthi[3], Mrs.A.Niranjana[4]

[1,2,3,4] *Department of Computer Science and Engineering,*
Easwari Engineering College, Chennai, Tamil Nadu, (India)

ABSTRACT

Visual Cryptography Scheme (VCS) is an encryption method used to encode secret written materials. The idea is to convert the written material into a binary image and encode this image in to n shadow image it is also called as shares of images. The decoding only requires selecting some subset of these n shadow images, making transparencies of them and stacking them on top of each other. Main advantage of this scheme is mathematical computation complexity is reduced to visual cryptographic techniques. Each participant holds a transparency. The pixel expansion and relative contrast are the most critical measurements to evaluate the effectiveness of a VCS. In this paper, VC in addition to Multiple-Secret Visual Cryptographic Schemes (MSVCS) can achieve the minimum pixel expansion and the maximal contrasts.Todevelop a novel and efficient construction for VC using MSVCS. The proposed Visual Cryptograms of Random Grids aims at the minimization of the pixel expansion and maximal contrasts for individual a VC. The Experimental results demonstrate the feasibility, applicability, and flexibility of our construction. The pixel expansions and contrasts derived from our scheme are also better than the previous results.

Keywords -Decryption, Embedded Visual Cryptography Scheme,Encryption,MSVCS And Visual Cryptographic.

I. INTRODUCTION

1.1 Halftone is the reprographic technique that simulates continuous tone imagery through the use of dots, varying either in size or in spacing, thus generating a gradient like effect. "Halftone" can also be used to refer specifically to the image that is produced by this process. Where continuous tone imagery contains an infinite range of colors or greys, the halftone process reduces visual reproductions to an image that is printed with only one color of ink, in dots of differing size or spacing.

1.2 Visual cryptography is to be encrypted in such a way that decryption becomes a mechanical operation that does not require a computer.

In visual secret sharing scheme,an image was broken up into n shares so that only someone with all n shares could decrypt the image, while any $n - 1$ shares revealed no information about the original image. Each share was printed on a separate transparency, and decryption was performed by overlaying the shares. When all n shares were overlaid, the original image would appear. Using a similar idea, transparencies can be used to implement a one-time pad encryption, where one transparency is a shared random pad, and another transparency

acts as the cipher text. Normally, there is an expansion of space requirement in visual cryptography. But if one of the two shares is structured recursively, the efficiency of visual cryptography can be increased to 100%

1.3 Authentication is the process of determining whether someone or something is, in fact, who or what it is declared to be. In private and public computer networks, authentication is commonly done through the use of logon passwords. Knowledge of the password is assumed to guarantee that the user is authentic. Each user registers initially, using an assigned or self-declared password. On each subsequent use, the user must know and use the previously declared password. The weakness in this system for transactions that are significant is that passwords can often be stolen, accidentally revealed, or forgotten.

II. LITERATURE SURVEY

Visual cryptography is one of the techniques used to encrypt the images by dividing the original image into transparencies. The transparencies can be sent to the intended person, and at the other end the transparencies received person candecrypt the transparencies using our tool, thus gets theoriginal image. The proposed Visual cryptography provides the demonstration to the users to show how encryption anddecryption can be done to the images. In this technology, theend user identifies an image, which is not the correct image.That is, while transmitting the image the sender will encryptthe image using our application here sender gets the two ormore transparencies of the same image. An application provides an option to the end user of encryption [1]. The end usercan divide the original image into number of different images.Using our application can send encrypted images that arein the format of GIF and PNG. The encrypted transparenciescan be saved in the machine and can be sent to the intendedperson by other means [source].The performance achievedis any qualified subset of shares can recover the secret image watermarking helps in enables Information hiding, copyright & piracy protection. Here, a technique involving halftone visual cryptography along with watermarking is proposed to achieve visual cryptography via half toning. Digital watermarking is then performed to this halftone image. This ensures that the merits of both visual cryptography and any forbidden subset of shares cannot obtain any information of the secret image other than the size of the secret image [5]. The drawback of print and scan process can introduce noise as well which can make the alignment difficult.

In [2], a method of Information hiding & Piracy protection in Image processing is discussed. Visual cryptography & Digital watermarking are achieved.The performance achieved isdata security has been a challenging task data hiding has a security hole in the encrypted Share file.The main drawback isone type of image format only.Occur due to pixel expansion and Contrast level.

In [3], Phishing is an attempt by an individual or a group to thieve personal confidential information such as passwords, credit card information etc. from unsuspecting victims for identity theft, financial gain and other fraudulent activities. In this paper we have proposed a new approach named as "A Novel Antiphishing framework based on visual cryptography" [4] to solve the problem of phishing. Here an image based authentication using Visual Cryptography is used.

The use of visual cryptography is explored to preserve the privacy of image captcha by decomposing the original image captcha into two shares that are stored in separate database servers such that the original image captcha can be revealed only when both are simultaneously available, the individual sheet images do not reveal the identity of the original image captcha. Once the original image captcha is revealed to the user it can be used as the password. The Performance Achieved is an image based authentication using Visual Cryptography is

used [6].The use of visual cryptography is explored to preserve the privacy of image captcha. The drawback aspect ratio of the recovered image cannot be maintained.The pixel-expansion problem is a major drawback with most VCSs that use the VC-based approach.

DIFFERENCES BETWEEN EXISTING SYSTEM AND PROPOSED SYSTEM

Table: 1 Comparison of Existing and Proposed System

S.No	EXISTING SYSTEM	PROPOSED SYSTEM
1	Maximum Pixel Expansion & Minimum Contrast	Minimum Pixel Expansion & Maximum Contrast
2	No Password Protection	Password Protection
3	Only Single Mode 2 out of 2	Multiple Mode n out of n
4	Only on JPG format Image	JPEG, PNG, PDF & etc.

III. SYSTEM ARCHITECTURE

3.1 Modules

1.1. Halftone Pattern

1.2. Embedded MSVCS

1.3. Stacking (Covering Subsets)

1.4. Authentication

1.5. Tampering

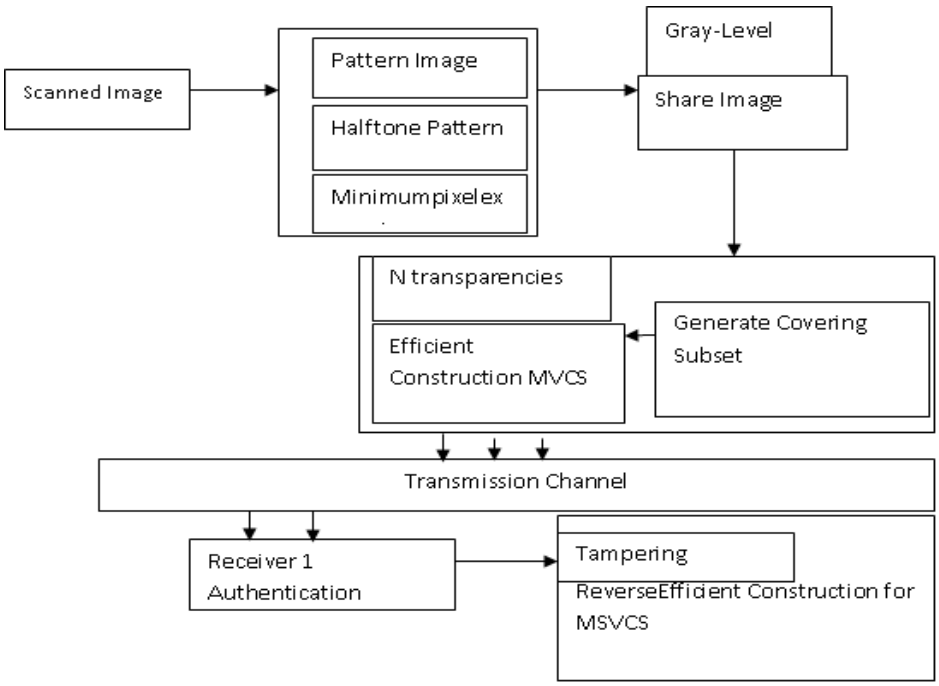

Fig.1 System Architecture Diagram

IV. FUNCTIONAL ARCHITECTURE

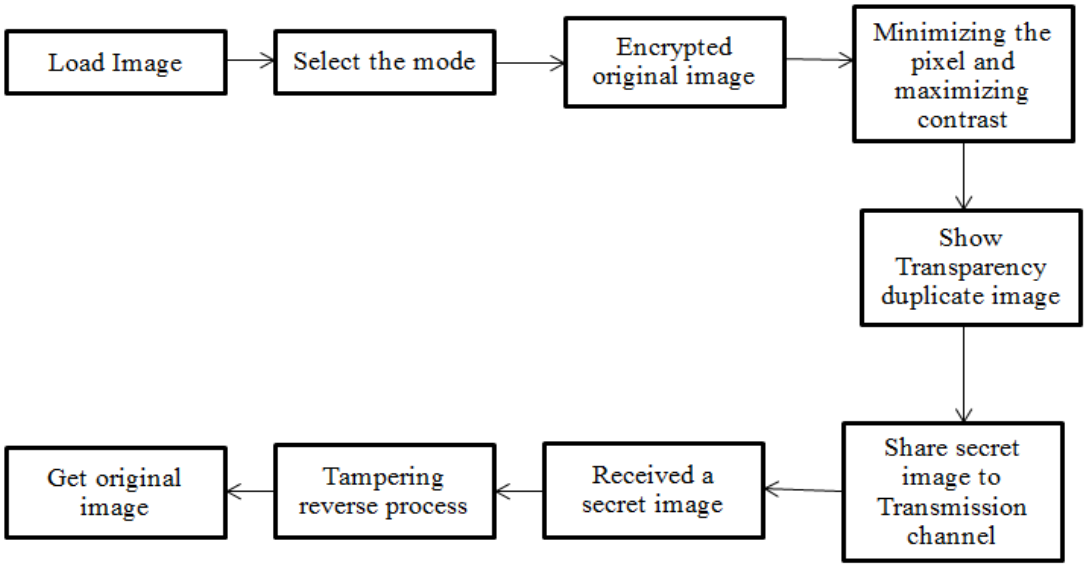

Fig.2 Functional Architecture diagram

V. MODULE DISCRIPTION

5.1. Halftone Pattern

To obtain the original image with only k shares out of n shares, then all the 'n' image shares are necessarily overlaid. When all the image shares that are overlaid are authenticated to be from the same original image.MSVCS share with transparent pixels and pixels from the cover images. MSVCS by using half toning techniques, and hence can treat gray-scale input share images. Their methods made use of the complementary images to cover the visual information of the share images.By using Patterning dithering matrix makes use of a certain percentage of black and white pixels, often called patterns, to achieve a sense of gray scale in the overall point of view.

5.2. Embedded MSVCS

Embedded MSVCS encode a secret image; the dealer takes gray-scale original share images as inputs, and converts them into covering shares which are divided into blocks of sub pixels. Embedded MSVCS contains three main steps:

5.2.1. Generate covering shares.

5.2.2. Generate the embedded shares by embedding the corresponding VCS into the 'n' covering shares information of the original share images are all covered. The stacking results are not necessarily to be all black images. The covering shares have the advantage it's a qualified subsets

5.2.3. Multiple-Secret Visual Cryptographic Schemes (MSVCS) can achieve the minimum pixel expansion and the maximal contrasts.Integer linear program aims at the minimization of the pixel expansion under the constraints for being a MSVCS.

5.3 Stacking (Covering Subsets)

The stacking results of the qualified shares are all black images, the of stacked.All the information of the patterns in the original share images is covered. Hence the visual quality of the recovered secret image is not affected.

5.4 Recipient/Authentication

Authentication has been verified by using Hash Authentication Code algorithm. Authorized user (Recipient) able to access the image, transmitted from Sender.Hash-based Message Authentication Code (HMAC) is a message authentication code that uses a cryptographic key in conjunction with a hash function.

5.5 Tampering

To detect whether or not a digital content has been tampered with in order to alter its semantics, the use of multimedia hashes turns out to be an effective solution.The hash to estimate and prevent the mean square error distortion between the original and the received image.At the cost of additional complexity at the decoder, the proposed algorithm is robust to moderate content-preserving transformations including cropping hash decoding.

VI. HALFTONE ALGORITHM

Halftone is the reprographic technique that simulates continuous tone imagery through the use of dots, varying either in size, in shape or in spacing.Where continuous tone imagery contains an infinite range of colors or greys, the halftone process reduces visual reproductions to a binary image that is printed with only one color of ink. Halftone contact screens can be MAGENTA or GRAY in color. Tint Screen: is used in the platemaking process to create the uniform tone pattern and contains a hard dot structure that is specified by a dot percentage.

1. Highlight = 5-10% in size.
2. Mid-tone = 30-70% in size.
3. Shadow = 90-95% in size
4. Highlights: the whitest tonal value.
5. Mid-tones: the gray tonal values.
6. Shadows: the darkest black tonal value.

VII INPUT & OUTPUT

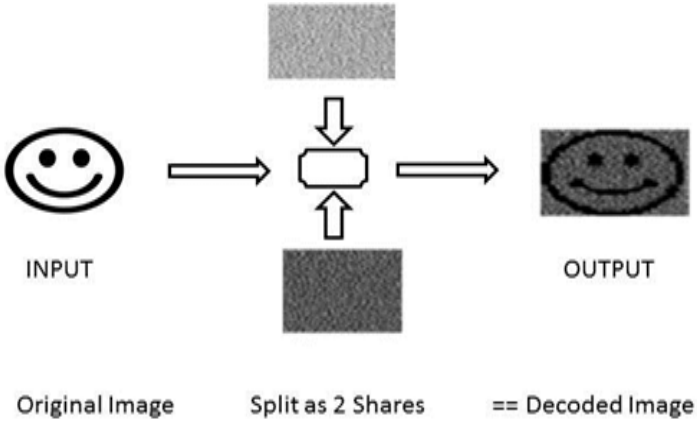

Fig.3 Input and Output Virtual Cryptographic Scheme

OUTPUT

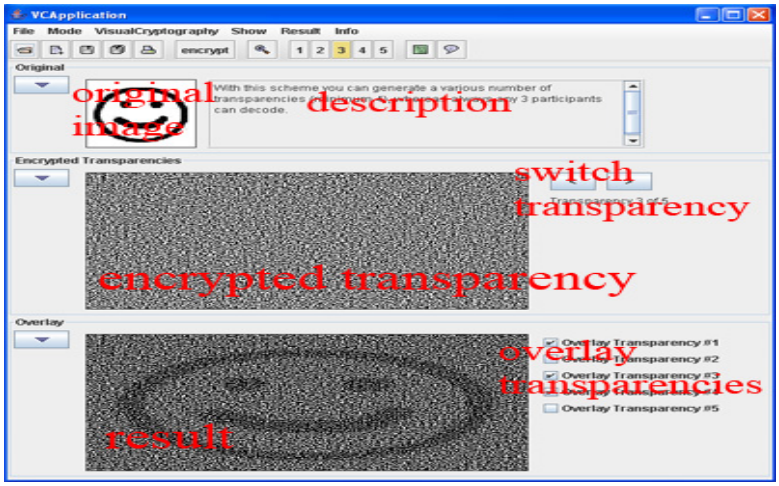

Fig.4 MSVCS Output

VIII. CONCLUSION

To established an efficient construction of n-MSVCS using the skill of linear programming in this paper. The object function aims at minimizing the pixel expansion subject to the constraints satisfying the region incrementing requirements. Unit matrices are introduced as the building blocks and thenumbers of the unit matrices chosen to form the basis matrices of n-MSVCS are set as the decision variables. A solution to these decision variables by our linear program delivers a feasible set of basis matrices of the required n-MSVCS with theminimum pixel expansion. The pixel expansions and contrasts derived from our n-MSVCS are better than the previous results. Since no construction method has ever been reported in the literature, our linear program formulation for n-MSVCS is novel and innovative from both the theoretical and practical points of view. The contrasts of different secret regions can also be designated in the constraints. This enhances the adaptability and flexibility of our MSVCS in practical applications.

IX. FUTURE ENHANCEMENTS

Embedded MSVC has many specific advantages against different well-known schemes, such as the fact that it can deal with gray-scale input images, has smaller pixel expansion, is always unconditionally secure, does not require complementary share images, one participant only needs to carry one share, and can be applied for general access structure. Furthermore, our construction is flexible in the sense that there exist two trade-offs between the share pixel expansion and the visual quality of the shares and between the secret image pixel expansion and the visual quality of the shares.

REFERENCES

[1] N. Anusha and P. Subba Rao, "Visual Cryptography Schemes for Secret Image," Inf. Computat., ISSN: 2278-0181, Vol. 1 Issue 5, July - 2014.

[2] M.Bharathi, R.Charanya and T.Vijayan "Halftone Visual Cryptography & Watermarking" ISSN: 2278-0181, Vol. 2 Issue 4, April - 2013.

[3] Dr.D.C.Joy Winnie Wise, Mr. H.Jeyamohan, A. Sreenivasa, and K.P.Vijaiy, "Visual Cryptography Scheme to Predict Phishing Sites," IJCSEC. Vol.2 ISSN: 2347–8586.Issue.4, July 2014.

[4] G. Ateniese, C. Blundo, A. De. Santis, and D. R. Stinson, "Extendedcapabilities for visual cryptography," Theoretical Computer Sci., vol.250, pp. 143–161, 2001.

[5] G. Ateniese, C. Blundo, A. De. Santis, and D. R. Stinson, "Visual cryptography for general access structures," Inf. Computat., vol. 129, pp.86–106, 1996.

[6] G. Ateniese, C. Blundo, A. De. Santis, and D. R. Stinson, "Constructionsand bounds for visual cryptography," Lecture Notes Computer Science. vol. 1099, pp. 416–428, 1996.

ARTIFICIAL INTELLIGENCE AND EXPERT SYSTEMS

Salil Bhalla[1], Sunandita Singh[2], Sakshi Bhalla[3]

[1]Assistant Professor, [2]Student, Electronics and Communication Engineering Department, Haryana Engineering College, Jagadhri(India)

[3]Technology Consultant, Hewlett Packward, Bangalore (India)

ABSTRACT

The issues and ethical problems that are arising in information system and automation in current time are somewhat different from the ethical problems that are related to future creation of machines with intellectual capabilities for outstripping those of humans. This super intelligence is not just important intention ever made it is also another technological development and more primarily it would lead to an explosive progress in all technological and scientific fields, as super intelligence would manage research with superhuman efficiency. The ethical and moral implications of artificial intelligence are different sides to the arguments and they are obvious. This paper will tell us about the concept and meaning of Artificial Intelligence, its applications, its merits etc. This paper focuses on somewhat different moral and ethical issues of AI and discusses what motivation we ought to give a super intelligence, and introduces considerations related to the development should be accelerated or retarded.

Keywords: Ai Components, Ai Intelligence, Applications, Brainwashing, Expert System, Robotics.

I. INTRODUCTION

The significant aim in research of Artificial Intelligence is to devise machines so that they perform various tasks normally that require human intelligence [1]. AI defines the field as "the study and design of intelligent agents [2]". An intelligent agent is a system that takes actions which maximizes its chances of success and perceives its environment [3]. AI is the intelligence of robots and machine and also the branch of computer science that aims to create it. Playing good games of chess, learning to improve its own performance, learning to translate languages and proving mathematical theorems are few such things that machine is expected to perform[4][5]. Although each of these tasks have somewhat certain peculiarities that defines it uniquely, many workers who work in this field feel that there are various characteristics which are common to the tasks which require intelligence and they have also tried to work on those problems in which these characteristics were quite visible and those tasks which are somewhat visible and common to many intelligence problems are initial description of a problem and transformation it into a more easily solvable form, heuristic approach and sub-problems associated to it, breakdown of a difficult problem into several other easier problems, and learning them through induction from various past experiences of it.

II. OBJECTIVES OF THE STUDY

- To know the meaning and concept of AI.

- To know the applications where AI is applicable.
- To study the concept of principles in AI.

III. ARTIFICIAL INTELLIGENCE

Artificial Intelligence is that branch of computer science which aims to study the computation requirements for various tasks including reasoning, perception, learning and develops the systems to perform those tasks. This term was coined by John McCarthy in 1955 at Massachusetts Institute of Technology [6] and defined it as, "the science and engineering of making intelligent machines."[7]. Intelligence means to respond flexibly to various situations and to make sense out of contradictory and ambiguous messages. The goals and central problems of AI research includes planning, knowledge, learning, reasoning and perception. Some current popular approaches consists of statistical methods and computational intelligence. The field of AI is interdisciplinary in which number of professions and sciences converges and which includes mathematics, psychology, philosophy, neuroscience and also other specialised fields such as artificial psychology. The field of AI aims to understand and build intelligent entities.

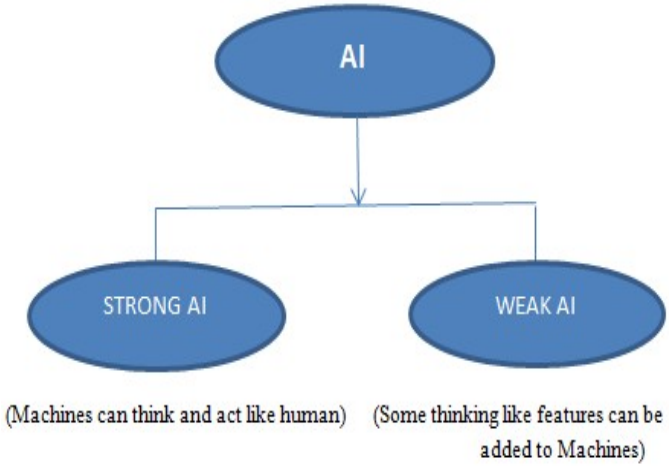

AI Is the field of science that deals with the analysis and synthesis of computational agents that act intelligently. An agent is something that acts in the environment i.e. it does something. We are only interested in what an agent does i.e how it acts to a particular environment. We can judge an agent by its actions. An agent is called to act intelligently when what it does is appropriate for its goals and circumstances, it is flexible to changing environments and changing goals, it makes appropriate choices, and it cannot observe the state of the world directly and it has limited time to act and has a finite memory. A computational agent is that agent who decides about its actions and which can be explained in terms of the computation. This means that decisions can be broken into primitive operation that can be implemented in some physical device. This type of computation can take many different forms. In human beings this type of computation is carried out in the "wetware" and in computers this computations is carried out in the "hardware".

IV. COMPONENTS OF AI

Mainstream thinking in psychology regards human intelligence not as a single ability process but rather as an array of separate different components. Research in Artificial Intelligence has focussed chiefly on the following components of intelligence: learning, reasoning, problem-solving, perception, and language-understanding. [10]

4.1 Learning

Learning can be distinguished into many other different forms which are applied to artificial intelligence. The simplest form is learning through trial and error. For example, a simple computer program used for solving mate-in-one chess problems tries to move randomly until the mate is found. The program then store the solution with the position so that when next time the computer encounter the same position it would recall the solution which is stored previously. Solutions to problems, words of vocabulary etc., these simple memorising of individual items is known as rote learning. Rote learning is relatively easy to implement on the computer. More challenging problem of implementing is called generalization. It involves applying past experience to new situations. This means that learning which involves generalisation makes the learner able to perform better in situations which are not encountered previously. For example, the program that learns the past tense of English verbs by rote will not be able to make the past tense of the word such as jump unless it had been presented previously with jumped, whereas a program that is able to generalize can be able to learn the "add-ed" rule and so can form the past tense of jump based on the experience with similar verbs. Sophisticated modern techniques enable the programs to generalise complex rules from the data.

4.2 Reasoning

To reason is to draw inferences appropriate for the particular situation. Inferences are classified either as deductive or inductive. An example of the former is, "Fred must be in either the museum or the café. He is not in the café; therefore he is in the museum," and of the later, "Previous accidents of this sort were caused by instrument failure; therefore this accident was caused by instrument failure." The most significant difference between these forms of reasoning is that in the deductive case the truth of the premises guarantees the truth of the conclusion whereas in the inductive case the truth of the premises lends support to the conclusion without giving absolute assurance. Inductive reasoning is very common in science, where data are collected and tentative models are developed to describe and predict the future behaviour until the appearance of the anomalous data forces the model to be revised again.

4.3 Problem solving

Problem solving has a general form for example given such and such data and find 'x'. Problem solving in artificial intelligence, may be characterized as a systematic search through a range of possible actions in order to reach some predefined goal or solution. A huge variety of different types of problems is addressed in artificial intelligence. Problem solving methods is divided into two parts-special purpose and general purpose. A special-purpose method is tailor-made for a particular problem and often exploits very specific features of the situation in which the problem is being embedded. In contrast, the general-purpose method is applicable to a wide variety of problems. One example of general-purpose technique used in Artificial Intelligence is means-end analysis—a step-by-step, or incremental, reduction of the difference between current state and final goal. The program selects actions from a list of different means which in the case of, say, a simple robot that might consist of PICKUP, PUTDOWN, MOVEFORWARD, MOVEBACK, MOVELEFT, and MOVERIGHT—until the goal state is reached from the current state.

4.4 Perception

In perception component the environment is scanned by means of various sensory organs which may be real or artificial, and processes analyse the scene and then the scene is decomposed into different objects in various

spatial relationships and their features. Analysis is somewhat complicated by the fact that an object present itself into many other different appearances on various other different occasions and it depends on the angle from which it is viewed, the direction and intensity of illumination in the scene, and how much the object contrasts with the surrounding field, whether or not the parts of it are projecting shadows. Artificial perception is sufficiently well advanced to enable optical sensors to identify individuals, autonomous vehicles like self controlled car device to drive at moderate speeds on the open road, and robots to roam through buildings searching for empty soda cans. One of the earliest systems to integrate perception and action was FREDDY, a stationary robot with a moving television eye and a pincer hand, constructed at the University of Edinburgh, Scotland, during the period 1966–73 under the direction of Donald Michie, who was able to recognise variety of objects from heap of components.

4.5 Language

A language is a system of signs having meaning by convention. Traffic signs, for example, form a mini language, it being a matter of convention that [hazard] means “hazard ahead” in some countries. An important characteristic of full-fledged human language for example English, which distinguishes them from, e.g. bird calls and systems of traffic signs, is their *productivity* A productive language can formulate an unlimited variety of sentences. A productive language is one that is rich enough to enable an unlimited number of different sentences to be formulated within it.

V. APPLICATIONS OF AI

There are various different areas where the Artificial intelligence is applicable. Few of them are as follows-

- Expert System
- Natural Language Processing (NLP)
- Speech Recognition
- Computer Vision
- Robotics
- Automatic Programming

5.1 Expert System

Expert Systems are computer programs that are derived from a branch of computer science research called Artificial Intelligence (AI). Expert system currently is designed to assist experts, not to replace them.

Expert system consists of two main parts. These are knowledge base and the reasoning or inference. The knowledge base of expert systems contains both factual knowledge and heuristic knowledge. Factual knowledge is that knowledge of the task domain that is widely shared, typically found in textbooks or journals, and commonly agreed upon by those knowledgeable in the particular field. Heuristic knowledge is the less rigorous, more experiential, more judgmental knowledge of performance. In contrast to factual knowledge, heuristic knowledge is rarely discussed, and is largely individualistic. It is the knowledge of good practice, good judgment, and plausible reasoning in the field. It is the knowledge that underlies the "art of good guessing." Knowledge representation formalizes and organizes the knowledge. One widely used representation is

the production rule, or simply the rule. A rule consists of an IF part and a THEN part (also called condition and action). The IF part lists a set of conditions in some logical combination. The piece of knowledge represented by the production rule is relevant to the line of reasoning being developed if the IF part of the rule is satisfied; consequently, the THEN part can be concluded, or its problem-solving action taken. Expert systems whose knowledge is represented in rule form are called rule-based systems. They have been used in medical diagnosis, chemical analysis, geological exploration etc.

5.2 Natural Language Processing (NLP)

Natural language processing is an interesting and difficult domain in which to develop and evaluate representation and reasoning theories. All of the problems of AI arise in this domain; solving "the natural language problem" is as difficult as solving "the AI problem" because any domain can be expressed in natural language. The field of computational linguistics has a wealth of techniques and knowledge. It helps to enable people and computers to communicate in a natural language (such as English) rather than in the computer language.

5.3 Speech Recognition

The user communicates with the application through the appropriate input device i.e. a microphone. The Recognizer converts the analog signal into digital signal for the speech processing. A stream of text is generated after the processing. This source-language text becomes input to the Translation Engine, which converts it to the target language text. The goal is to allow computers to understand human speech so that they can hear our voices and recognize the words we are speaking. It simplifies the process of interactive communication between people and computers.

5.4 Computer Vision

By vision, we meant of sensing environment. The goal of computer vision is to give computers this same powerful facility for understanding their surroundings. To do with seeing using information mediated by light in order to interact successfully with the environment As much to do with biological systems as with computers, but there are many different approaches: How do people and animals see? How can we make useful robots that see? What are the general computational structures that underly vision? How do we reconstruct the 3rd dimension from 2-D images? How can we build machines to solve specific tasks involving vision? Very interdisciplinary Artificial Intelligence, Computer Science, Engineering, Psycholog, Neuroscience, Mathematics. AI helps computer to understand what they see through attached cameras.

5.5 Robotics

A robot is an electro mechanical device that can be programmed to perform manual tasks or a reprogrammable multi-functional manipulator designed to move materials, parts, tools or specialized devices through variable programmed motions for performance of variety of tasks. Artificial intelligence and robotics are two closely related areas of study that fall under the field of computer science. AIand robotics specialists design computers and machines that act similar to humans with as little human involvement as possible. An intelligent robot includes some kind of sensory apparatus that allows it to respond to change in its environment.

5.6 Automatic Programming

Programming is the process of telling a computer that exactly what you want it to do. The aim of automatic

planning is to create special programs that act intelligent tools to assist programmers and expedite each phase of programming process

VI. EXPERT SYSTEM ETHICS

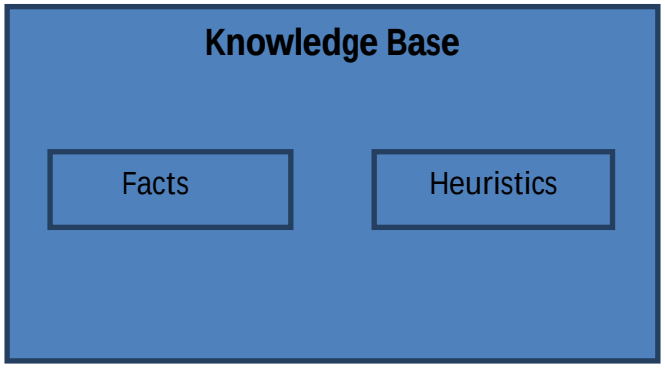

The most important applied area of AI is the field of expert systems. An expert system (ES) is a knowledge-based system that employs knowledge about its application domain and uses a reason procedure to solve various problems that would otherwise require human expertise. The power of expert systems aims primarily from the specific knowledge about a narrow domain stored in the expert system's knowledge base. Expert systems do not have human capabilities. They use a knowledge base of a particular domain and bring that knowledge to bear on the facts of the particular situation at hand. The knowledge base of an expert system also contains heuristic knowledge, the knowledge rules of thumb used by human experts who work in that domain. The applications of expert system include high-risk credit decisions, advertising decision making, and manufacturing decisions. There are various generic categories of expert system applications which include classification, diagnosis, monitoring, process control, design, scheduling and planning, and generation of options. Classification means identifying the object based on stated characteristics. Diagnosis Systems means infering any malfunctioning or disease from the observable data. Monitoring means comparing data from a continually observed system to prescribe certain behaviour. Process Control means controlling a physical process based on monitoring. Design means configuring a system according to specifications. Scheduling & Planning means to develop or modify a plan of action. Generation of Options means generating an alternative solution to a problem. Expert System technologies include Specific expert systems, Expert system shells, Expert system development environments, High-level programming languages.

There are several levels of Expert System technologies available. There are two important things which are to be kept in mind while selecting expert system tools, these are-

1. The tool selected for the project has to match the capability and sophistication of the projected ES, in particular, the need to integrate it with other subsystems such as databases and other components of a larger information system.

2. The tool also has to match the qualifications of the project team.

VII. ROBOTICS AND NEURAL NETWORKS

Artificial intelligence and robotics are two areas of study that are closely related and they fall under the category of computer science. Robotics and artificial intelligence robotics specialists design machines and computers that similar to humans where very little human involvement is possible. It considers the fat that how artificially intelligent beings may be used to benefit humans and how they may be used to harm humans.

7.1The threat to privacy

Aleksandra Solzhenitsyn's The First Circle describes the use of speech recognition technology in the service of tyranny. If an AI program exists that can understand speech and natural languages (e.g. English), then, with adequate processing power it could theoretically listen to every phone conversation and read every email in the world, understand them and report back to the program's operators exactly what is said and exactly who is saying it.

7.2 Robot Rights

Robot rights are those moral obligations of society towards its machines, similar to animals or human rights. These may include the right to life and liberty, freedom of thought and expression and equality before the law. The issue has been considered by the Institute for the Future and by the U.K. Department of Trade and Industry.

7.3 The Threat to Human Dignity

Joseph Weizenbaum argued in 1976 that AI technology should not be used to replace people in positions that require respect and care, such as:

- A customer service representative, (AI technology is already used today for telephone-based interactive voice response systems)
- A therapist, (as was seriously proposed by Kenneth Colby in the 1970s)
- A nursemaid for the elderly, (as was reported by Pamela McCorduck in her book The Fifth Generation)
- A judge, or
- A police officer.

VIII. BRAINWASHING

The above statements are very good example of complexity in programming an artificial brain. The human brain is evolved through millions of years of survival and social behaviour. Imitating human brains working is a huge challenge and by judging the advance of current processor power and complexity it will take several decades more to reach. Once its decided that people want android robots and other machines with an artificially created intelligence sophisticated enough to rival our own. But the question still remains with which ethical and moral values should one install them?

AI shows the same diversity as humans, so what would be the point of creating artificial humans? There are no clear answers. Research is very diverse covering all of the aspects of Artificial Intelligence. We do not even agree on what exactly defined intelligence and already we are creating artificial ones. If we do build android machines with a intended intelligence that think and behave like humans, should not they made absolutely submissive to us?. The super human intelligence that not grant rights can think their human masters and might resist control. The AI’s who are granted rights may begin to feel themselves superior to humans and that the rights granted by humans are insufficient. They may view that it is then their decisions of what rights to grant to

humans and not the decision of humans of what rights to grant to them. Many have examined this problem of AI and come to a diverse set of conclusions. IssacAsimov formulated the famous three laws of Robotics which should be the most basic leading behaviour of all Robots. The laws are:-

- A robot may not damage human being or allow a human being to come and harm human.
- A robot must obey instructions given it by human beings except where such orders would conflict with the first law.
- A robot must protect its own existence as long as such protection does not spat with the first and second law. Thus any potential for anti-human action are completely eliminated.

So on a more realistic manner, one should create an artificial intelligence in android or machine form, that would function as an unbiased entity and that this entity's only purpose for eg. Is to teach.

So, then does one give up the obvious benefits of creating AI that can do work of human beings and renounce from doing so? Or does one risk the damage of the species, giving into the desire to improve the quality of human life and to push the limits of human knowledge. Therefore, the issue of which principled, moral and cultural values to instate on our artificially created intelligence goes on. If it cannot even answer a simple "why?", then maybe we should make sure these machines are not intelligent at all. Not capable of making any decision beyond mechanical, programmed movement and certainly not capable of any deductive reasoning and not in any position where it could influence or have control over humans or human society.

XI. CONCLUSION

This paper focuses on the concept that artificial intelligence is becoming a debatable topic these days. The risks in developing super intelligence include the risk of failure to give it the super goal of philanthropy. One way in which this could happen is that the creators of the super intelligence decide to build it so that it serves only this select group of humans, rather than humanity in general. More subtly, it could result in a super intelligence realizing a state of affairs that we might now judge as desirable but which in fact turns out to be a false utopia, in which things essential to human flourishing have been irreversibly lost. We need to be careful about what we wish for from a super intelligence; because we might get it. Many diverse problems have been solved by artificial intelligence programs. Some examples are finding the winning move (or sequence of moves) in a board game, devising mathematical proofs, and manipulating "virtual objects" in a computer-generated world. One deliberation that should be taken into account when deciding whether to promote the development of super intelligence is that if super intelligence is possible, it will likely be developed sooner or later. Therefore, we will almost certainly one day have to take the gamble of super intelligence no matter what. But once in existence, a super intelligence could help us lessen or eliminate other existential risks, such as the risk that advanced nanotechnology will be used by humans in warfare or terrorism, a serious threat to the long-term survival of intelligent life on earth. If we get to super intelligence first, we may avoid this risk from nanotechnology and many others. If, on the other hand, we get nanotechnology first, we will have to face both the risks from nanotechnology and, if these risks are survived, also the risks from super intelligence. The overall risk seems to be minimized by implementing super intelligence, with great care, as soon as possible. Artificial intelligence is making humans redundant and their frirndliness supergoal will cause it to value humanity and individual human beings. An AI coordinating a city could do so in tandem with, not instead of, humans. It is possible for a team of people to control all the traffic lights in a city, but people get bored and sick and quit, and they need breaks for

lunch and cannot work continously. A machine that controls the traffic signals can operate forever, never takes a day off, and never ends a day off, and never needs to be paid. It would be more efficient, and safe.

REFERENCES

[1] Anonymous," Current research and development in scientific documentation, 14," National Science Foundation Washington, D.C., Rept.NSF-66-17.1966.

[2] Poole Mack worth & Goebell1998. P.1

[3] Russell & Norvig 2003, pp.27, 32-58,968-972., Poole &Mack worth&Goebell 1998, pp: 7-21, Luger &Stubbefield 2004, pp.235-240

[4] P.Abrahamas, J.Hansen, and M.Pivar," Final Report, research in sequence analysis,"Information International, Inc.,Cambridge,Mass.,April 1965.

[5] R.J.Solomonoff,"Some recent work in Artificial Intelligence", Proceedings of the IEEE, Vol.54, No.12,December 1966

[6] Tecuci.G.(2012),"Artificial Intelligence. Wires CompStat", 4:168-180.doi:10.10021 wics.200

[7] O'Connor, Kathleen Malone (1994),"The Alchemical creation of life and other concepts of Genesis in medieval Islam. University of Pennsylvania. Retrieved 10 January 2007.

[8] The optimism referred to includes the predictions of early AI researchers (see optimism in the history of AI) as well as the ideas of modern transhumanists such as Ray Kurzweil.

[9] See the Dartmouth proposal, under Philosophy,

[10] R.J.Solomonoff,"Some recent work in Artificial Intelligence", Proceedings of the IEEE, Vol.54, No.12,December1966.

BIOGRAPHICAL NOTES

1. Mr. Salil Bhalla is presently working as Assistant Professor in Electronics and Communication Engineering Department in Haryana Engineering College, Jagadhri, India.

2. Ms. Sunandita Singh is presently pursuing M-Tech in Electronics and Communication Engineering from Haryana Engineering College, Jagadhri, India.

3. Mrs. Sakshi Bhalla is presently working as Technology Consultant in HP (Hewlett Packward), Bangalore, India.

GRAPHENE: A FUTURE POTENTIAL CARBON FIBER MATERIAL

Sapkal Vishal K.[1], Bhamare Punam A.[2],

Patil Ulhaskumar V.[3], Awate Swapnil P.[4], Gunjal Shrikant U.[5]

[1, 2] U. G. Student, Department of Mechanical Engineering, Sandip Foundation's- SITRC, Mahiravani, Nashik, Maharashtra, (India)

[3, 4, 5] Asst. Prof. Dept. of Mech. Engg. Sandip Foundation's- SITRC, Mahiravani, Nashik, Maharashtra, (India)

ABSTRACT

A small amount of Graphene by direct mixing were employed to disperse these nanoparticles into a mono-component epoxy system and used as matrix for advanced composites with woven Glass and Carbon fiber reinforcements. These nanoparticles were added directly into the hosting system and dispersion was carried out by using mechanical stirring. In this study the hybrid polymer composite with Glass fiber, Carbon fiber and epoxy polymer is used. The mechanical characterization results confirm that the composite developed by using graphene nanoparticles represents a fundamental feature in enhancing the tensile elastic modulus and hardness behavior of the composite system, whereas graphene has significant effect on the bending modulus and impact behavior. The optical microscopic study for the fractured samples reveals a significant increase in the fiber-matrix interface adhesion whereas decrease in fiber breakage, fiber pullout and deboning.

Keywords: Epoxy resin, Graphene fillers, Graphene oxide, Hybrid polymer composites, Nano composites, thermosetting resin, Thermal properties.

I.INTRODUCTION

In recent years, composite materials have found increasing applications in construction, aerospace and automotive industries due to their good characteristics of light weight, improved strength, corrosion resistance, controlled anisotropic properties, reduced manufacturing and maintenance costs. However, there is a growing demand to improve on composite materials with reduction in the cost of construction.Everyone agrees that graphene holds massive promise [1]. Possessing a unique portfolio of desirable properties, including excellent conductivity, mechanical strength, gas barrier, thermal and biocompatibility, graphene is an intriguing material.The physical nature of the graphene platelets is important: Factors such as the uniformity, platelet size and the number of graphene platelets in a stack have a fundamental effect on the physical and chemical properties of the grapheme[2], which in turn affects the efficacy of the graphene in its intended use.

II. HISTORY

TABLE 1 HISTORY

SR.NO.	YEAR	TECHNOLOGY
1	1950	Carbon fiber study would start in scientifically.

2	1963	Carbon fiber study will start in industries.
3	1985	Carbon fiber Nano technology with graphene
4	1993	Carbon graphene study will start.

III.CARBON FIBER

Carbon fiber is a material consisting of extremely thin fibers about 0.005–0.010 mm in diameter. The carbon atoms inside the fibers are bonded together in microscopic crystals [3]. There are also other fibers such as glass fiber and aramid fibers. Carbon fiber is mostly occurs in black color.

3.1 Comparison of Carbon Fillers

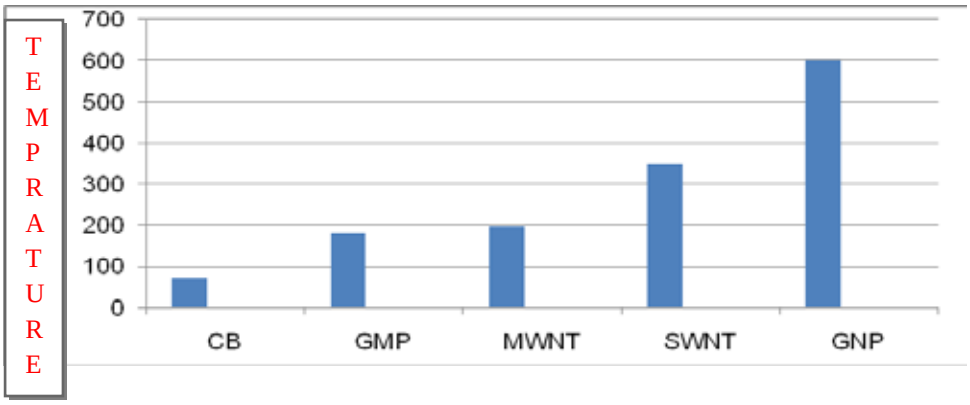

Fig. 1: Graph of Material vs. Temperature

CB- Carbon black

GMP- Graphite microplatelet

MWNT-Multi-WalledCarbon Nanotubes

SWNT- Single-Wall Carbon Nanotubes

GNP- Graphite Nano platelet

3.2 Carbon Fiber Manufacturing Technology

Fig. 2: Manufacturing Technology For Graphene

IV. GRAPHENE

The use of functional graphene is therefore a fundamental part of new product design and should be factored into the plan for the product in the earliest stages of development.

A definitive identification of graphene can be made by analysis of XRD pattern.The XRD pattern of graphite,graphite oxide and graphene are shown in figure 6. XRD pattern of graphite shows an intense peak 2θ = 26·4°.This peak corresponds to 002 plane of graphite withinterlayer spacing of 0·34 nm. In the XRD pattern ofgraphite oxide a new peak appears at 2θ = 13·2°, correspondingto the 002 plane of graphite oxide (Schniepp etal 2003). The interlayer spacing of GO is ~ 0·75 nm,which is significantly larger than that of graphite, due tointercalating oxide functional groups. The mechanism ofexfoliation is mainly the expansion of CO2 evolved intothe interstices between the graphene sheets during rapidheating. The disappearance of native graphite XRD peaksin the XRD pattern of as-prepared graphene sample supportsthe formation of graphene sheets. The SEM imageof graphene sample is shown in figure 7a, where thesheets are highly agglomerated and particles have a fluffymorphology. The TEM image of graphene sample showsa wrinkled paper like structure in low magnification.The selected area diffraction (SAED) pattern ofgraphene sheets is shown in inset of figure 7b. The diffractionpattern indicates the formation of few layers ofgraphene[4].We have measured the d.c. electrical conductivity ofas-prepared graphene sample by four probe setup whichwas ~ 10·6 S/cm at room temperature. The characterizationof graphene sample and investigation of graphene–polymer composites are being carried out and results willbe forthcoming.

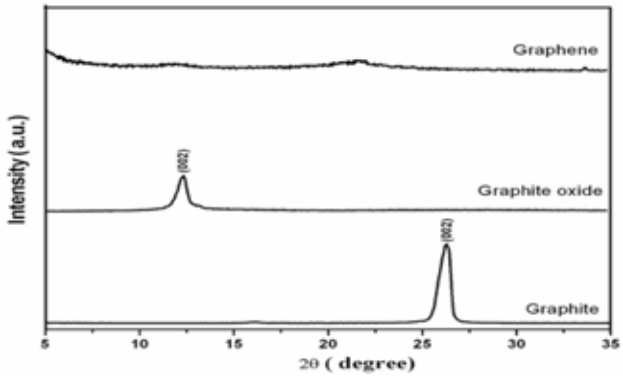

Fig. 3: XRD Patterns of Graphite, Graphite Oxide and Graphene Samples

V. SYNTHESIS OF GRAPHENE

Graphite oxide (GO) was prepared by reacting graphitepowder (5 g) with a mixture of conc. nitric acid (45 ml) and sulphuric acid (90 ml) with potassium chlorate(~ 55 g) at room temperature for 5 days. For thermal exfoliationof graphite oxide, the dried graphite oxide powder (~ 200 m) was placed in a quartz tube (diameter~ 25 mm and length ~ 1·3 m). The sample was flushedwithAir for 15 min and the quartz tube was quickly insertedinto a furnace preheated to 1050°C and held in thefurnace for 30 s. The as-prepared GO was a brownishpowder while the exfoliated version was of light consist enchant shiny black [5].The structural characterization of all the carbon Nano materials were carried out using X-ray diffraction techniqueemploying Expert PRO PANanalytical diffract meter equipped with graphite monochromatic with a Cusource (λ = 1·54 Å, CuKα operating at 45 kV and 40 mA).The as-grown carbons material was characterized byusing scanning (SEM, Philips XL 20), and transmission(TEM, Tacna 20 G2) electron microscopes.

VI. ADVANTAGES

- Carbon fiber has less factor of safety.
- CF has maximum high strength compared withall other fiber material.

- Carbon fiber secure its strength at elevatedambient temperature
- Moisture, acid and solvent at ambienttemperature don't affect carbon fiber.
- Carbon fiber is cheap.
- Light weight at low cost.

VII. LIMITATION

- Manufacturing techniques required to producecarbon fiber are relatively complicated.
- Design of component made of fiber reinforcedplastics is complex. It is necessary to know thedirection of principal stresses in suchcomponents. The fibers are aligned along thedirection of principal stresses.

VIII. APPLICATIONS

- Aerospace engineering.
- Automotive engineering.
- Sports.
- Civil engineering.
- Low-weight high pressure gas storage tank.

IX. FUTURE SCOPE

The future scope of the carbon fiber is soon after university of Manchester physicist's kostyanovosilov & andrejeim discover the wonder material Graphehne-1-atom-thick sheets of carbon that are a one hundred times stronger & much lighter than steel-researchers started incorporating it into polymer composites in the hope of creating materials with greatly improved physical properties. Nearly decade later, efforts to fabricate practical Graphene composites continue apace, but the technology is still in its infancy. Recently, however, a pioneering project began to develop novel Graphene-based Nano composites that one day could truly revolutionize the automotive industry [6]. The 18-month, $1.1-million iGCAuto research collaborative, which is funded by the European Union's 10-years, billion-Euro Graphene Flagship program aims to make high-performance Graphene composites that could reduce the weight of car structures by One-third or more. Advanced composite material are widely viewed as the promising way to make vehicles more fuel-efficient & light weight, but low-mass vehicles tend to perform less vehicle in collisions. So new approaches must be found to enhance the crashworthiness of composites. Graphene composites may be able fill that role. The new iGCAuto consortium comprises a half-dozen research group at the University of Sunderland in Britain, Centro Ricerche FIAT inItaly, Fraunhofer ICT in Germany, Interquimica in Spain, & two Italian Specialist R&D entities, Nanesa, Srl& Delta-Tech SpA.

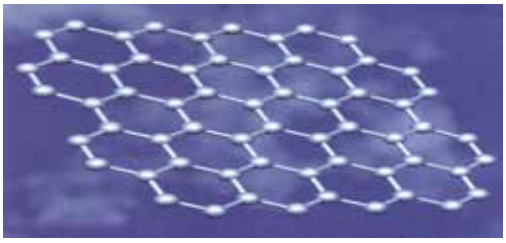

Fig. 4: Structure of Graphene

"Graphene has tremendous application for the automotive industry, and using it to enhance the composite materials in car has considerable potential," said Ahmed Elmarakbi, Prof. of Automotive Engineering at Sunderland, who wrote the original iGCAuto proposal.

"We planned to develop a new way to use Graphene to enhance polymer composites that we hope can save as much as 30% to 50% in automotive structural weight-the chassis and body-in-white-compared to today's steel cars," Elmarakbi said. "In five or six years that improvement could even reach 70%."

The resulting components could not only lesson weight, but also could feature substantially thinner cross section as well.

Fig. 5: Future Potential Application of Graphene in Automobiles

The Graphene-based material will be investigated, modeled, & designed to provide improve strength, dimensional stability, thermal behavior, & flame retardance [6]. Fewer smoke emissions is another goal, as is as superior durability-properties that would boost vehicles & occupant safety.

Thus research plans to exploit a novel nanocatalyst and unique Graphene-based nanocomposites materials that were develop by Egyptian scientist Sherif EI-Safety, Chief Researcher at Japan's National Institute for Materials Science, Elkmarakbi said. "Although we're at a very early stage & still have to fully prove the concept, I am growing more confident that our collaboration will be fruitful."

X. CONCLUSION

It has bright future scope because of their low cost, light weight, good mechanical and physical properties like stiffness, high tensile strength etc. from this paper, factor of safety is essential for every component. It depends upon factor i.e. predictable or unpredictable. If predictable, than factor of safety is less and if unpredictable, than factor of safety is high. Carbon fiber is better than all other fibers.The addition of graphene to carbon laminated composites seems to have no influence into stiffness, as the slopes of the stress-strain curves were near constant for all specimen tested. The bending strength, however, wash easily influenced by the formation of graphene pileups into the epoxy matrix and its dispersion around the carbon fibers. The increase on bending strength reached a peak of 140%for the 0.5 % wt. specimens. This enormous increase on bending strength can be attributed to changes on failure mechanism, moving from intra-laminar failure to a mix failure mode where

inter- and intra-laminarfailure are combined in a zigzag pattern. A possible explanation for such behavior is the formation ofstrong bonds at fiber/matrix surroundings due to nanostructures formation.

REFERENCES

[1] Thwe, M. M.; Liao, K.; Comp. Sci. Tech. **2003**, 63, 375. **DOI:** S0266-3538(02)0225-7

[2] Sreekala, M.S.; George, J.; Kumaran, M.G.; Thomas, S.; Comp. Sci. Techno. **2002**, 62, 339. **DOI:** 10.1177/0731684405041717.

[3] AGATE-WP3.1.031027-043-Design Guideline Work Package Title: WBS3.0 Integrated Design Manufacturing, March1, 2002

[4] V. I. Kostikov, "Constructional Materials on the Basis of Carbon in Modern Equipment—Chelyabinsk: Collection of Scientific Works," *Modern Problems of Production and Operation of Carbon Production*, 2005, pp. 8-11.

[5] V. A. Zorin and N. I. Baurova, "Influence of External Factors on the Accuracy of Diagnosing of Road-Building Cars with Use of Carbon Fibers," *Construction and Road Cars*, No. 1, 2009, pp. 50-51.

[6] MOBILITY ENGINEERING, AUTOMOTIVE, AEROSPACE,OFF-HIGHWAY, Volume 1, Issue 5, December 2014.

FUTURE SCADA SYSTEM WITH SMARTER GRID A SMART VISION FOR INDIA

Bharat Nayyar[1], Pratipal Singh[2]

[1]*Department of Computer Science, SKIT, (India)*

[2]*Department of Computer Science, SKIT, (India)*

ABSTRACT

This paper describes a view of SCADA system for future power infrastructure. SCADA is used for distribution of electricity generation on wide area and smart grid is used in integration of information into distribution network. Decentralized energy systems may play an important role for future power systems. SCADA focuses on development of infrastructure, which must support the integration of existing conventional power systems with renewable energy resources. In developing countries, renewable power systems are more complex and use the conventional resources like coal because of which they are widely dispersed power sources. This paper first provides a view of future power delivery and smart grid systems in India and then reviews the present infrastructure of power grid. Based on this review, future grid and future SCADA systems cope with the significant penetration of distribution generation, communication and aged power assets is proposed for wide area monitoring, emergency protection, control demand area, and secure communications. There are many devices connected to the grid and enable us to exchange the information with power system. This will enable the future Indian Smarter Grid and Future of SCADA system.

Keyword : Distribution Generation, Future SCADA, Maintenance, Protection, Smart Grid

I. INTRODUCTION

The main purpose of the Supervisory Control and Data Acquisition (SCADA) system is taking real-time data, monitoring and controlling equipments and processes in the infrastructure with the help of sensors and controllers. A SCADA system for power distribution application is typically a PC- based software package and grid is a term used for transmission of data from distributer to consumer. Few functionalities provided by the software make it smart; that's why it known as smart grid. These functions are self-healing, tolerant to attacks, empower and incorporate the consumer, provide power qualities etc. Energy generation and no storability of electricity is one of the most discussed issues in India. And today's technology is not suitable enough for 21st century. A small scale power generation technology that supplies electric power to the consumer, located on the distribution system near to the consumption place is called Distribution Generation (DG) [1]. India's spending on power infrastructure is growing year by year. According to some surveys India estimated spending $250 billion on power sector generation and $447 billion on infrastructure [2]. The exponential growth of small scale power generation in the last few decades getting more attention, not only has economic advantage, but also environmental impacts [1]. India is a developing country, that's why power sector plays an important role for the Indian economy. Distribution generation consists of dispersed generation including renewable resources like solar, wind, fuel cell and biomass. In the solar energy sector in India, some large projects have been proposed; one of them is running in Thar Desert which generates 700 to 2100 GW [3]. The capacity of wind power in India approx 21200 MW [4].

This paper first discusses about SCADA system for distribution generation with SCADA system in Smart Grid. Then how one can integrate this geographically dispersed generation to the existing power generation plants. And this extendable infrastructure becomes more and more complex. Future SCADA system should handle this so as to ensure the reliability of the clean electricity.

II.DISTRIBUTED GENERATION WITH SCADA IN SMART GRID AND ADVANTAGES AGAINST CENTRALIZED SCADA SYSTEM

In India electricity generation depends mostly on large power plants, mainly using coal (primary energy resource). Raised utilization and demand of primary energy resource is a big issue. The scarcity of the primary energy resource has raised the cost of electricity generation. In the recent decades, small and medium size generation has been gaining more attention. These distribution generations are connected to the distributed system close to the consumer's location and with the emergence of technologies DC grid has changed to AC grid, reducing the loss in the transmission line [9].

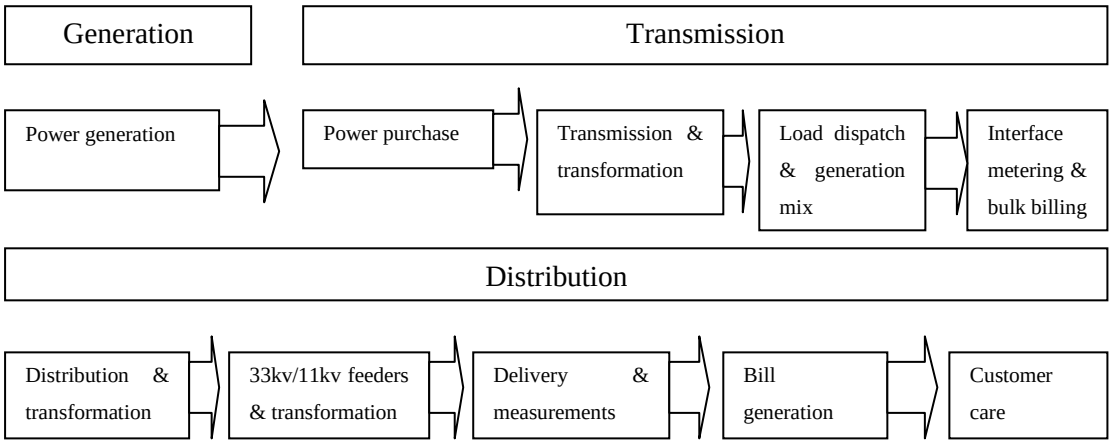

Figure 1: Electricity Value Chain

Large generation station with the vast transmission and distribution grid has come to existence. This interconnection helps to solve the demand and supply problem. Distribution generation can also be defined as a small scale power generation is structural benefits and market related. Structural benefits means how to minimize the cost of the transmission and market benefits means deal with the electricity price volatility, improving power quality and reliability. Restructuring of electric power system creates three major categories, power generation, transmission and generation. There are lots of advantages of distributed generation against the centralized generation. In centralized system in emergency state, only specific area can be under investigation and in decentralized or distributed system make entire control system reliable.

In centralized control system, all the information exchanged between control center and different nodes will be a short period of time. In this case the communication between controllers should work with no error margin, if the error occurs the entire system will collapse. Which means if the some controllers are not working properly, the entire SCADA system will shut down. In distributed control system, the entire system is divided into different control area. And each area owns a local or virtual control system to monitor and control on real time

basis. Which means if a failure occurs on particular area, that area local control system improves that failure and that time only that area will be shut down? So a failure occurred in one control area have less effect on others. That makes it reliable.

SCADA is widely geographically dispersed, we know that. In centralized system the huge database and complex computation make the processing slower. And in distributed system, the task divided into subtasks and these are carried by the local area control center according to control area. These subtasks are processed in distributed computation and this improves the response time.

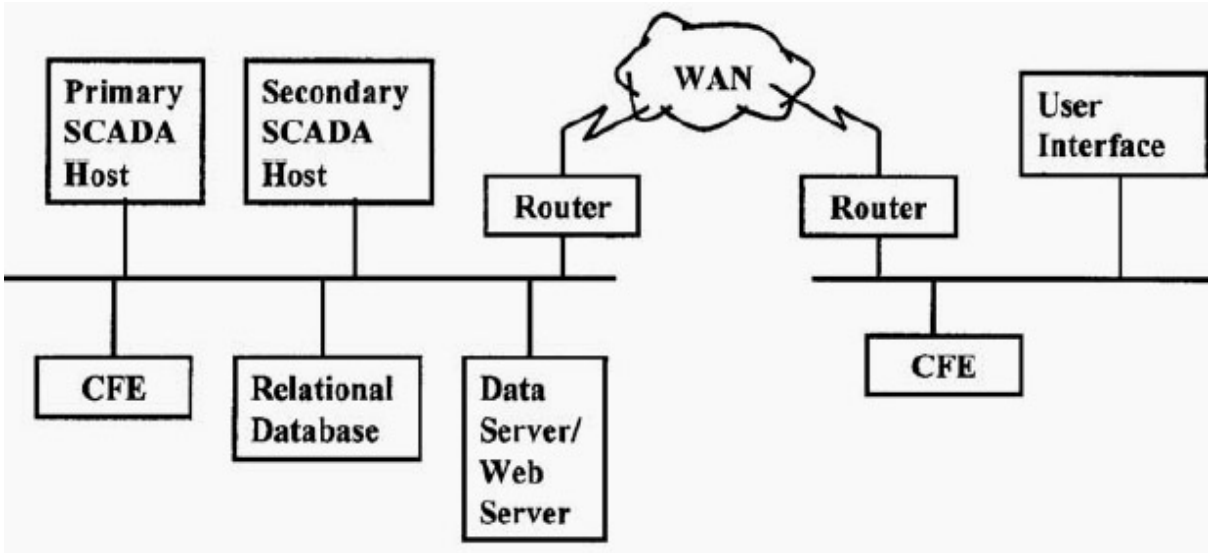

Figure 2: Centralized Control System

If any problem occurs in the main communication system in centralized control system, the whole SCADA does not function properly. And in distributed control, the exchange of data will be within the local area control center. This makes information exchange faster and the data processed locally.

Centralized control system also has High electrical loss, limitation with infrastructure that's why it is not useful for future expansions, vertical structure, in case of failure there is a power cut, high infrastructure cost and unidirectional power flow. Decentralized control system reduce the electrical losses, best for future expansions, failure in one control area covered by central control system and continue from the power grid, bi-directional power flow.

III.INTEGRATION OF DISTRIBUTED GENERATION AND RENEWABLE ENERGY SOURCE

A large amount of our country's infrastructure is dependent on the electricity power. And for generation of electricity we still use the primary energy source that is coal. But from last decade or two, due to scarcity of the primary energy resource has raised the cost of production. Because without this energy source how can we generate electricity? So now we also use the renewable energy source for the electricity generation. So in today's era we use both conventional resource and renewable resource together but the main problem is that how we can integrate this distributed generation and renewable energy source with existing control system? Due

to big change in world climate, rapid increasing of power demand risks the future power systems in general and specially the SCADA system [11].

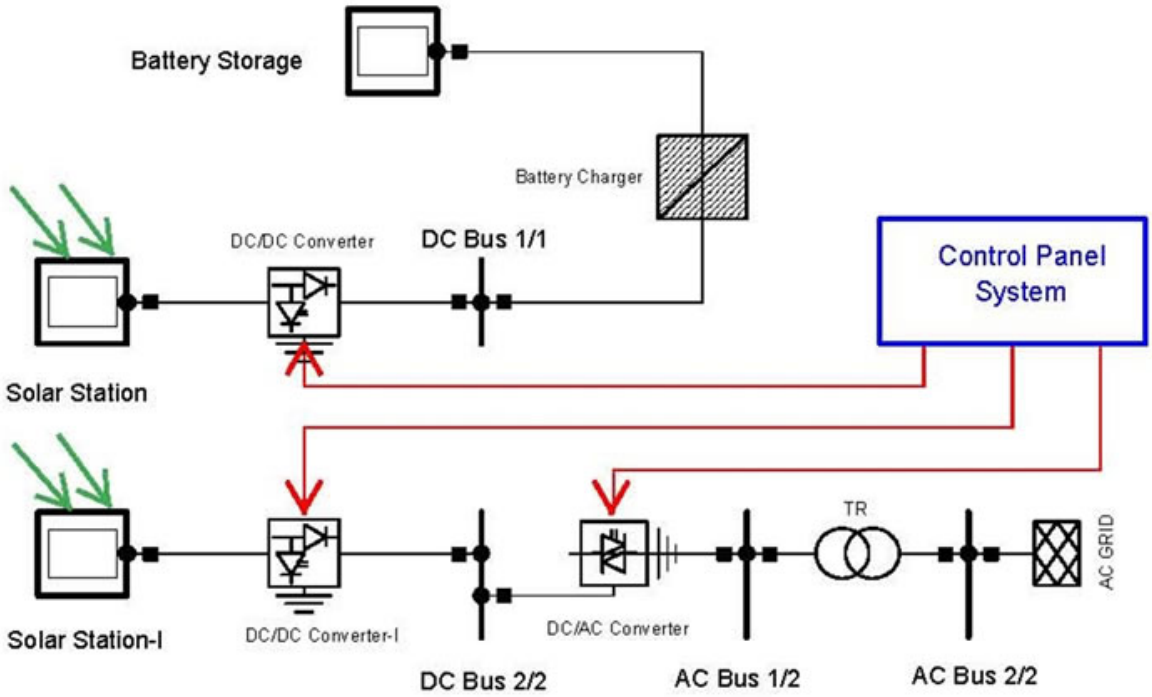

Figure 3: Decentralized Control System in Renewable Energy Source

Renewable energy source is to get the green power generation. These power sources are small in size and located in different places, that makes them to be known as distribution generation [5]. The main aim of the integration is to reduce the cost of energy while increasing the share of renewable energy. The future power grid is a smart grid which can integrate and is able to manage Distributed and Renewable energy source. Using more renewable energy will put upward pressure on unit costs. Renewable energy doesn't have the same operating characteristics, load factors, cost-volume drivers, or dispatch ability as conventional energy, especially base load plants. Renewable energy will stress transmission grids differently and significant investment will be needed to reconfigure bulk power networks.

IV.SMART GRID VISION IN INDIA WITH RENEWABLE ENERGY SOURCE

There are six main factors that will drive the adoption of the smart grid in India. Supply shortfalls, in India, according to official estimates show that the short falls are 12% for total energy and 16% for peak demand. Loss reduction, manage human element in system operations, peak load management, renewable energy. Transform the Indian power sector into a secure, adaptive, sustainable, and digitally enabled ecosystem that provides reliable and quality energy for all with active participation of stakeholders [7]. To support system operators by providing the real time information to make decision on selection generation from renewable energy resources. Indian official estimates increased renewable generation enabled by smart grid could reduce greenhouse gas emission.

In India, some solar plants are running in Rajasthan, Gujarat, Maharashtra, and Madhya Pradesh. In Rajasthan, a 700 to 1200 GW solar power plant is situated. Gujarat contributes 2/3 of the 900 MW in the country [3][6].

Wind power development has been started in 1990s in India. Installed capacity of Indian wind power is nearby 21200MW [4]. Tamil Nadu, Maharashtra, Gujarat, Rajasthan, Andhra Pradesh, Kerala, Orissa are the major wind power plants of India.

V.FUTURE SCADA SYSTEM AND SMART GRID IN INDIA AND CONCLUSION

Distributed computation, monitoring and control will offer an efficient method for power system operators. Distributed generation systems use decentralized control system where local generation plants own a SCADA system. SCADA technology helps the power companies to exchange information and data between different nodes in the entire network. This network comprises of energy management system and distributed management system. The smart grids have computerized systems that give efficient and smooth information exchange for monitoring [8].

REFERENCES

[1] N. Jenkins, R. Allan, P. Crossley, D. Kirschen and G. strbac IET power and energy series 31 “Embedded Generation”.

[2] The smart grid vision for India’s power sector “white paper”.

[3] Solar power in India, "Sustainable production of solar electricity with particular reference to the Indian economy". Renewable and Sustainable Energy Reviews

[4] wind power in India, “World Wind Energy Report 2008".

[5] H. Lee Willies, walter G. Scott; Distributed power generation planning and evaluation.

[6] "Gujarat flips switch on Asia’s largest solar field, leading India’s renewable energy ambitions". Washington Post (New Delhi, India).

[7] Jyotiraditya M. Scindia, Pradeep Kumar Sinha, Sam Pitroda, “smart grid vision and road map for India, ministry of power government of India”.

[8] T.K. Apostolopoulose, G. C. Oikonomou. “a scalable, extensible framework for grid management”. 22nd IASTED international conference Feb, 2004 , Austria.

LOCATION AWARE ROUTING SCHEMES FOR MOBILE ADHOC NETWORKS

Kalpesh P. Popat[1], Dr. Priyanka Sharma[2], Hardik K. Molia[3]

[1]Research Scholar, [2]Research Supervisor, Gujarat Technological University, Ahmedabad, Gujarat, (India)

[3]Asst. Prof., Dept. of Computer Engineering, Govt. Engg. College, Rajkot, (India)

ABSTRACT

One of the promising wireless network that is based on anytime, anywhere access is the mobile ad hoc network (MANET). A MANET consists of a set of mobile hosts without any support of other devices such as base stations. It is attractive since it can be quickly setup and operated by batteries only. Some critical issues are required to be handled carefully while implementing MANETs in reality. Routing is one of the most critical issues in MANETs. As MANETs allow nodes to be mobile, to change their positions during communication, it may generate issues like route failures and network partitions. The conventional routing schemes are not appropriate in such scenarios. Some advance routing algorithms, such as AODV, DSR, DSDV are proposed which has improved performance significantly. By location awareness, we mean that a host is capable of knowing its current physical location in the three-dimensional world. This paper explores some of the most successful location aware routing schemes.

Keywords: Gedir, Gps, Gpsr, Gra, Lalr, Manet

I. INTRODUCTION

1.1 Network Layer Issues

MANETs support user mobility and so dynamic topologies. As the topology is dynamic, routing is very critical. The traditional routing algorithms don't provide good performance under such scenarios where nodes are continuously changing their locations as well as becoming up and down.[1]

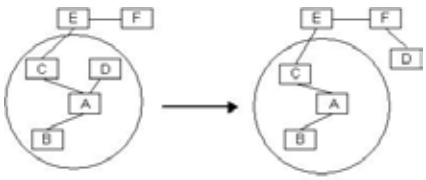

Fig. 1- Node D moves out of Range of A

Fig. 2 shows that some nodes in a MANET become off due to power failure or shut down by the owner. In such case, sometimes network is partitioned in to two or more halves if the node was the only connecting point among them. [1]

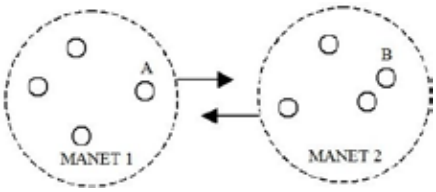

Fig. 2- MANET Partitions

1.2 Routing Architecture

Flat routing keeps information about every node in the MANET without differentiation as per their locations. This strategy is suitable for small MANET to get good performance but it becomes difficult as number of nodes increases. it generates a lot of overload in maintaining information at every node. Hierarchical architecture divides MANET into a set of geographically separated small chunks called the clusters. Every cluster has a set of nodes inside and one of them is selected as cluster head. Routing is performed among cluster heads only.[1]

In proactive routing algorithms, so every node has complete topology of the network to which it belongs. Every node maintains latest toplogy in its own database so it provides fast routing. WRP and DSDV are proactive routing protocols in MANETs.[1]

In reactive routing algorithms, route is searched only when it is needed. So these algorithms are light weighted as compared to proactive algorithms but require more time when a new route is required to be created. DSR and AODV are reactive routing protocols in MANETs.[1]

1.3 Location Awareness

GPS (Global Positioning System) is the most widely used tool to calculate a device's physical location. GPS is a worldwide, satellite -based radio navigation system. The GPS system consists of 24 satellites which transmit navigation messages periodically. Each navigation message contains the satellite's orbit element, clock, and status. After receiving the navigation messages, a GPS receiver can determine its position and roaming velocity. To determine the receiver's longitude and latitude, we need at least three satellites. If we also want to determine the altitude, another satellite is needed. More satellites can increase the positioning accuracy. The positioning accuracy of GPS ranges in about a few tens of meters. GPS receivers can be used almost anywhere near the surface of the Earth. By connecting to a GPS receiver, a mobile host will be able to know its current physical location. This can greatly help the performance of a MANET, and it is for this reason that many researchers have proposed to adopt GPS in MANETs. [2]

II. GPSR (GREEDY PERIMETER STATELESS ROUTING)

2.1 Gpsr

The greedy perimeter stateless routing (GPSR) protocol assumes that each mobile host knows all its neighbors' locations (with direct links). The location of the destination host is also assumed to be known in advance. The GPSR protocol does not need to discover a route prior to sending a packet. A host can forward a received packet directly based on local information. Two forwarding methods are used in GPSR: greedy forwarding and perimeter forwarding. [3]

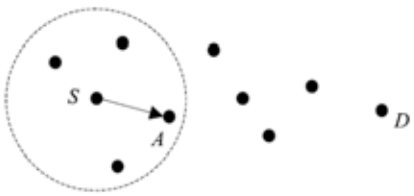

Fig. 3- Greedy Approach

Fig 3. Shows an example of greedy forwarding. When host S needs to send a packet to host D, it picks from its neighbors one host that is closest to the destination host and then forwards the packet to it. In this example, host A is the closest one. After receiving the packet, host A follows the same greedy forwarding procedure to find the next hop. This is repeatedly used until host D or a local maximum host is reached.[3]

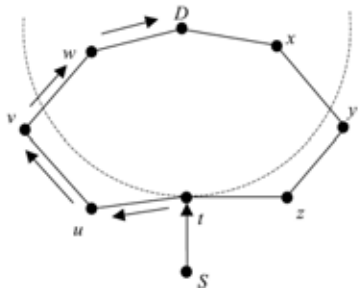

Fig. 4- perimeter forwarding approach

A local maximum host is one that finds no other hosts that are closer to D than itself. In the example in Fig. 4, host t is a local maximum because all its neighbours are farther from D than itself. Therefore, the greedy forwarding method will not work here. When this happens, the perimeter forwarding method is used to forward the packet. The perimeter forwarding method works as follows. The local maximum host first "planarizes" the graph representing the network topology. A graph is said to be planar if no two edges cross. The graph may be transformed into a relative neighbourhood graph (RNG) or a Gabriel graph (GG). Both RNG and GG are planar graphs. After the graph is planarized, the local maximum host can forward the packet according to a right-hand rule to guide the packet along the perimeter of a plane counter clockwise. For example, in Fig. 18.3 at t , we can forward the packet along the perimeter of the plane dxyztuvw counter clockwise. As the packet is forwarded to host w, we know that we are closer to D (as opposed to the location of host t). Then the greedy forwarding method can be applied again, and the packet will reach destination D. Overall, these two methods are used interchangeably until the destination is reached. The GPSR is a stateless routing protocol since it does not need to maintain any routing table.[3]

2.2 Gra

The geographical routing algorithm (GRA) is also derived based on location information. To send or forward a packet, a host first checks route entries in its routing table. If there is one, the packet is forwarded according to the entry. Otherwise, a greedy approach is taken, which will try to send the packet to the host closest to the destination. If the packet runs in to a local maximum host, GRA will initiate a route discovery procedure to discover a route from the host to the destination. This is done by flooding. After the route reply comes back, the route entry will be stored in the host's routing table to use in future. [3]

2.3 Gedir

The geographic distance routing (GEDIR) protocol assumes that each host has the locations of its direct neighbors. Similar to GPSR, the GEDIR protocol also directly forwards packets to next hops without establishing routes in advance. There are two packet-forwarding policies: distance approach and direction approach. In the distance approach, the packet is forwarded to the neighbor whose distance is nearest to the destination. However, in the direction approach, the packet is forwarded to the neighbor whose direction is closest to the destination's direction. The latter can be formulated by the angle formed by the vector from the current host to the destination and to the next hop. [3]

III. LAR (Location-Aided Routing)

The location-aided routing (LAR) protocol assumes that the source host (denoted as S) knows the recent location and roaming speed of the destination host (denoted as D). Suppose that S obtains D's location, denoted

as (Xd, Yd), and speed, denoted as v, at time t0 and that the current time is t1 . We can define the expected zone in which host D may be located at time t1 (refer to the circle in Fig. 5). The radius of the expected zone is R = v(t1 – t0). [4]

From the expected zone, we can define the request zone to be the shaded rectangle as shown in Fig. 6 (surrounded by corners S, A, B, and C). The LAR protocol basically uses restricted flooding to discover routes. That is, only hosts in the request zone will help forward route-searching packets. Thus, the searching cost can be decreased. When S initiates the route-searching packet, it should include the coordinates of the request zone in the packet. A receiving host simply needs to compare its own location to the request zone to decide whether or not to rebroadcast the route-searching packet. After D receives the route-searching packet, it sends a route reply packet to S. When S receives the reply, the route is established. If the route cannot be discovered in a suitable timeout period, S can initiate a new route disco very with an expanded request zone. The expanded request zone should be larger than the previous request zone. In the extreme case, it can be set as the entire network. Since the expanded request zone is larger, the probability of discovering a route is increased with a gradually increasing cost. [4]

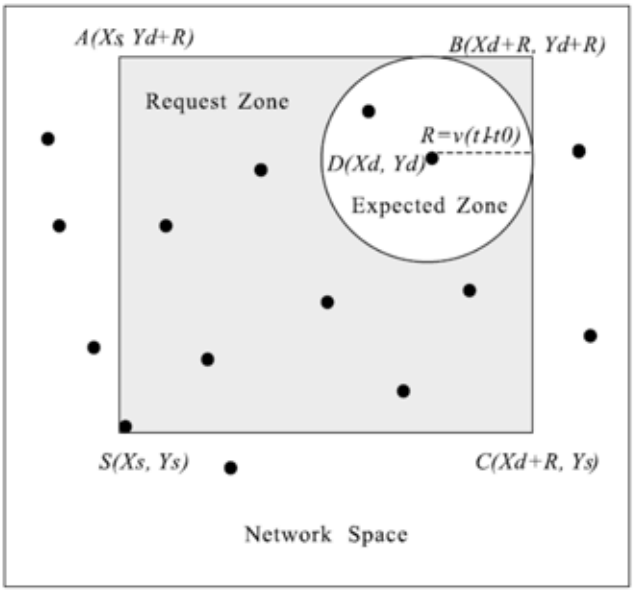

Fig. 5- LALR

IV. CONCLUSION

Algo	Strategy	Information
LAR	Discover route by flooding request packets in request zone	Destination's location and roaming speed
GPSR	Greedy forwarding (distance-based) and perimeter forwarding	Destination's location and all neighbors' locations
GRA	Greedy forwarding (distance-based) and flooding	Destination's location and some neighbors' locations
GEDIR	Greedy forwarding (distance- or direction-based) and flooding	Destination's location and all neighbors' locations

REFERENCES

[1] Hardik K Molia, Rashmi Agrawal , "Exploring the Challenges in MANETs", International Journal of Advanced Networking & Applications 2014

[2] A. Fasbend er et al., Variable and Scalable Security: Protection of Location Information in Mobile IP, Mobile Technology for the Human Race, IEEE 46th Vehicular Technology Conference, 1996.

[3] D. Forsberg et al., Distributing Mobility Agents Hierarchically Under Frequent Location Updates, Sixth IEEE International Workshop on Mobile Multimedia Communications, 1999.

[4] W. Chen, N . Jain, and S. Singh, ANMP: ad hoc network management protocol, IEEE Journal On Selected Areas In Communications, 17(8), 1999.

SWIRL MEASURING EQUIPMENT FOR DIRECT INJECTION DIESEL ENGINE

G.S.Gosavi[1], R.B.Solankar[2], A.R.Kori[3], R.B.Chavan[4], S.P.Shinde[5]

[1,2,3,4,5] *Mechanical Engineering Department, Shivaji University, (India)*

ABSTRACT

Traditional swirl-measurement equipment that adopts a paddle wheel is manually operated to measure the swirl intensity generated from a helical port in an engine cylinder head. The conventional equipment was modified to operate automatically using a pneumatic cylinder to adjust the valve lift. The automatic swirl-measuring equipment was operated in either steady or quasi-steady flow conditions. The surge tank pressure was controlled automatically opening or closing a bypass valve, when the swirl flow was measured in a steady flow whereas, when the swirl flow was in a quasi-steady flow, the surge tank pressure varied naturally adapting to the valve lift in the conditions of closing the bypass valve. Photo sensor is used to measure the paddle speed and differential manometer is used to measure, the pressure at nozzle.

Keywords: Automation, Paddle Wheel Method, Quasi-Steady Flow, Steady Flow, Swirl Flow

1. INTRODUCTION

In order to postpone the energy crisis, one method is to employ the alternative fuels and another is to reducing the fuel consumption of internal combustion engine (ICE). In addition, the global warming effect is an important concern as well. However, the design of an internal combustion engine is a complex. To enhance the efficiency of an engine it is important to optimize thermal efficiency which is obtained at the highest possible compression ratio. But if the compression ratio is too high, there is a chance to have knock, which should be avoided. A solution for this problem is to promote rapid combustion to reduce the time available for the self-ignition to occur. To promote rapid combustion, sufficient large-scale turbulence (kinetic energy) is needed at the end of the compression stroke because it will result in a better mixing process of air and fuel and it will also enhance flame development. However, too much turbulence leads to excessive heat transfer from the gases to the cylinder walls and may create problems of flame propagation. The engine should run at low speeds, in order to have low mechanical losses but the combustion should be fast, enabling good combustion efficiency. Therefore high turbulence should be produced prior to combustion within the cylinder so swirl was induced by the inlet channel within the cylinder head. One of the most important factors that affect diesel engine performance is the rapid mixing of air and fuel in the combustion chamber. The important parameters affecting the air–fuel mixing of diesel engines include fuel injection pressure, injection timing, the architecture of the combustion chamber and the swirl intensity in the combustion chamber. The swirl flow, which induces the intake air to move in a tangential direction during the compression stroke is usually generated in the engine cylinder head. The highly pressurized injected fuel is deflected and dispersed in tangential flow in combustion chamber, which assists the air-fuel mixture in combustion chamber. The swirl flow in the combustion chamber remains an important influencing factor of the mixture formation process in the direct-injection diesel engines. The nature of the swirl flow in an operating engine is extremely difficult to determine instead, steady flow tests are often used to characterize the swirl. There are several swirl-measurements techniques used by manufacturers are the paddle

wheel and impulse method. In the paddle wheel method, the swirl of a charge in a cylinder can find be by calculating the ratio of rotary speed of the paddle in a swirl measurement apparatus, to the engine speed as calculated by measuring the intake air flow rate. For the swirl measurement, the air is sucked by a blower through the port, over the valve lift with an adjustable stroke, past the cylinder liner and the surge tank and finally to a differential flow meter. The valve lift of the cylinder head is controlled automatically. In order to measure swirl in steady state the surge tank pressure is maintained constant by adjusting the bypass valve to either opened or closed. The swirl measuring equipment was modified by closing the bypass valve and controlling the valve lifts which allows quasi-steady flow condition.

1.1 Need Of Measurement Of Swirl:

Fuel droplets cannot be injected and distributed uniformly throughout the combustion space. If air within the cylinder were motionless then there will not be enough oxygen in the burning cone and burning of fuel would be either slow or totally fail. As it would be surrounded by its own products of combustion. Hence an orderly and controlled movement must be imparted to the air, so that a continuous flow of fresh air is brought to rate burning droplet and the products of combustion swept away. The rotational motion of fluid mass within the engine cylinder is called as “swirl”.

- One of the important factor affecting the air-fuel mixture is the swirl intensity inside the combustion chamber.
- Swirl affects the mixing and distribution of charge in the cylinder of diesel engine.
- Low values of swirl are desirable in racing engines.
- High values of swirl are desirable in applications concerned with efficiency and emissions.

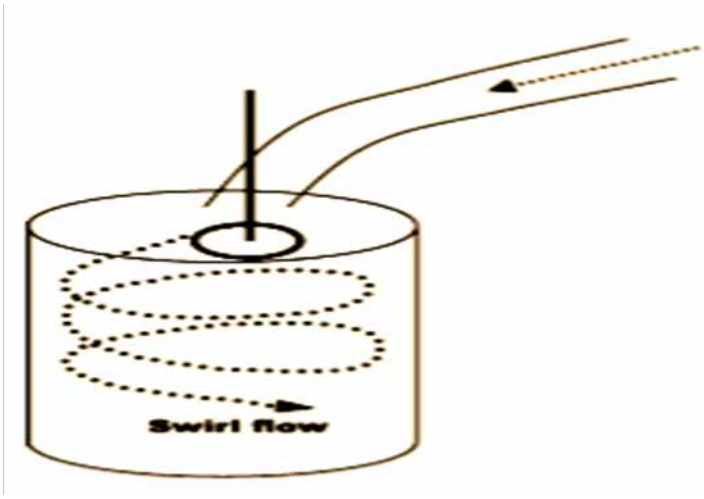

Fig.1: swirling motion in an engine cylinder

II. SWIRL MEASURING EQUIPMENT

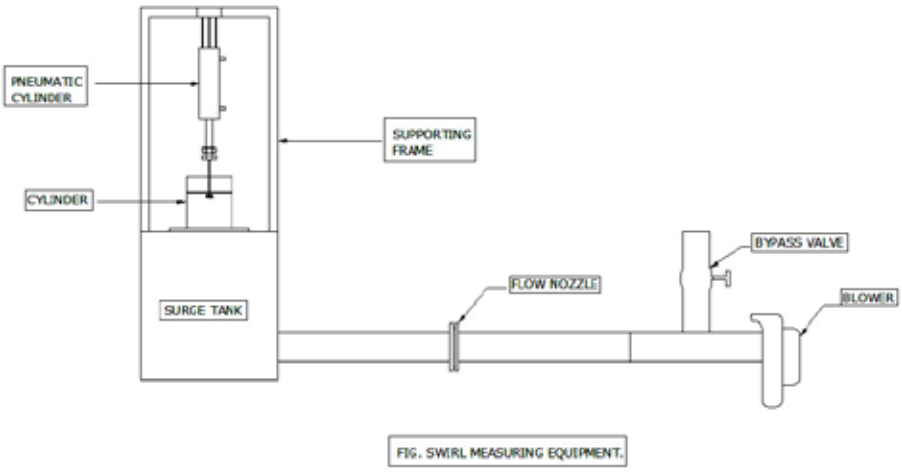

Fig.2: Block diagram of swirl measuring equipment experimental set up

2.1 Construction

The construction of swirl measuring equipment comprises of following parts:

- Surge tank :

The surge tank works as the vacuum creating tank in the swirl measuring equipment. The surge tank is structural member in equipment. The paddle wheel is mounted on the surge tank. The cylinder is also mounted on surface of surge tank. It is also connected to blower through pipe arrangement. The surge tank is used to create vacuum which is an essential requirement of the equipment.

- Cylinder and valve assembly:

The cylinder used in this experiment is Direct Injection Diesel Engine. The cylinder head is mounted on surge tank. The cylinder head consists of valve, actuating spring for the valve, cylinder of standard dimensions. These are one of the important parts in the equipment. The cylinder is made according to the large head engine dimensions.

- Paddle wheel:

The paddle wheel is mounted in the surge tank. The paddle wheel measures the intensity of air swirl. The paddle wheel is attached with sensor and counter for measuring the revolutions of paddle wheel. Paddle wheel is placed exactly below the cylinder head.

- Photo sensor and counter:

The photo sensor is a proximity switch which is kept near the paddle wheel for sensing the revolutions. The measured revolutions are displayed with the help of counter. The electrical input is given to the counter and displays the revolutions. The paddle wheel is equipped with a material which is used by the sensor to sense.

- Pipe assembly:

The one end of pipe is connected to the surge tank and other end is connected to the blower. The pipes are consists of flow nozzle in between them. There is arrangement for measuring the pressure difference before and after the orifice. Bypass valve is also connected with the pipe. The bypass valve is used to maintain constant pressure inside the surge tank.

- Blower:

The blower is connected with one end of the pipe. It creates vacuum inside the surge tank by sucking the air which is present inside of the Surge tank.

2.1 Working of Equipment

The swirl-measurement equipment developed in this study was traditional swirl-measurement equipment using several sensors for essential measurement of swirl. Two differential pressure manometers that measure the intake air flow rate and surge tank pressure, a photo sensor that counts the paddle revolutions, a spring that adjusts the valve lift, and manually operated bypass valve for adjusting surge tank pressure respectively in the traditional swirl-measurement equipment. For the measurement of the swirl ratio of the cylinder head, the Air is sucked by a blower through the port over a valve with an adjusted lift, past the cylinder liner and surge tank, and into the flow nozzle. The pressure drop is maintained uniformly at either 60mm H_2O or 40mm H_2O by controlling the bypass valve to be either opened or closed according to the position of the intake valve lift. A pulse pick-up transmits the paddle wheel rotation to an optical counter. The number of pulses for a given time interval are measured with counters, and the measurement provides the rotation speed ($N_{D)}$ of the paddle wheel. The pressure loss (ΔP) across the flow nozzle is measured with manometer. This procedure is repeated after adjusting the valve lift several times. The valve lift of the cylinder head is controlled by the spring. After the valve lift is adjusted to a large position, the bypass valve is controlled with the manually to obtain the target surge tank pressure. Therefore, the valve movement time interval between consecutive valve lifts cannot be constant when measuring the swirl in a steady flow. When the valve lift was increased continuously with a constant time interval with the bypass valve closed, the intake flow in the cylinder is in quasi-steady state. The valve lift in the quasi-steady flow is adjusted continuously. The spring that adjusts the valve lift. The reason why the spring is used to control the valve lift is due to its exact timing in controlling the interval between consecutive valve lifts. The observations required from the swirl measurement equipment were measured and recorded in a data, while the valve lift was adjusted continuously with a constant time interval. The surge tank pressures, the differential pressure at the flow nozzle are measured at each valve lift. The paddle rotating speed was calculated from cumulating the count of the photo sensor signals during a time interval of the adjustment between consecutive valve lifts.

III. FORMULAE USED

3.1 Mass Flow Rate

The intake air flow rate is measured using the flow nozzle. The pressure difference ΔP across the flow nozzle between the upstream and downstream is measured using the differential manometer in order to calculate the mass flow rate $\dot{m}$ from :

$$m = C_d \times A \times \sqrt{2 \times \rho \times \Delta P} \quad (1)$$

Where,

m = mass flow rate (kg/s)

C_d = coefficient of discharge for flow nozzle = 0.95

A = area of flow nozzle (m^2)

ρ = density of air (kg/m^3)

ΔP = pressure difference (N/m^2)

The swirl estimates the rotation intensity of the cylinder charge, which is very important in the air–fuel mix in the combustion chamber. An equivalent engine speed N (rev/min) corresponding to the intake air flow rate measured with the flow nozzle is obtained by equating the axial flow velocity V_a to the mean piston speed V_m according to,

Axial flow velocity $$(V_a) = \frac{m}{\rho A} \quad (2)$$

Mean piston speed $$(V_m) = \frac{SN}{30} \quad (3)$$

Equivalent engine speed $$(N) = \frac{30m}{\rho SA} \quad (4)$$

3.2 Swirl Ratio

It is the ratio of rotation of paddle wheel placed inside the engine cylinder to the equivalent engine's speed.

$$\frac{N_d}{N} = \frac{N_d \rho A S}{m\, 30} \quad (5)$$

Where,

N_d =Speed of the paddle (rpm)

N = equivalent engine speed (rpm)

m= mass flow rate (kg/s)

A = area of piston (m^2)

S = engine stroke (mm)

3.3 Specifications of engine cylinder used for experiment

Engine model	-	R6126ZLCD
Type	-	4 stroke, Direct Injection diesel engine
Bore	-	135 mm
Stroke	-	120 mm
Diameter of piston	-	128 mm

3.4 Result Table for Steady state operation

SR NO.	VALVE LIFT (mm)	PADDLE WHEEL SPEED (RPM)	TANK PRESSURE (mm of water)	PRESSURE DIFFERENCE (ΔP in mm of water)	SWIRL NUMBER
1.	2	330	60	10	0.12
2.	4	600	60	20	0.16
3.	6	850	60	22	0.21
4.	8	952	60	24	0.23
5.	10	1012	60	18	0.28
6.	12	1210	60	16	0.36

The maximum swirl ratio is obtained at the maximum valve lift of the cylinder. The limit for the vertical displacement or movement of the valve is in between 2mm to 12 mm. Within this range the swirl ratio can be achieved at various valve lift. The swirl ratio is maximum at the valve lift of 12mm. The swirl ratio is dimensionless number and it is measured in terms of RPM.

IV. CONCLUSION

Swirl measuring equipment is easy to install and operate, resulting in low cost of ownership. Insertion of paddle wheel, lowers installation and maintenance cost. Equipment is developed to measure the swirl of an engine cylinder head. The equipment can be operated in either steady or quasi-steady flows. With the help of swirl number information, we can control the rate of combustion and emissions. With higher number of swirl, faster the combustion takes place, higher is the efficiency and lower the emissions. With the lower number of swirl, lower will be the rate of combustion, lower the efficiency and more will be emissions. We can adjust swirl number according to the application required and enhance the engine performance. For the future enhancement of the project automation is required. For the automation we can use PID controller transducers and stepped motors.

REFERENCES:

[1] Yuh-Yih Wu, Hsien-Chi Tsai, Manh-Cuong Nguyen, “Investigation of realizing SDI with high swirlcharge in a motorcycle engine” INTERNATIONAL JOURNAL OF ENERGY, Issue 2, Vol. 3, 2009

[2] K I Kim and C H Lee, "Development of a new swirl-measurement method for an engine cylinder head by automating the swirl-measuring process" Department of Automotive Engineering, Seoul National University of Technology, Proc. IMechE Vol. 223 Part D: J.

[3] Rajinder Kumar Son and Pranat Pal Dubey" Diesel engine air swirl measuements using AVL TEST RIG", International Journal Of Mechanical Engineering and Technology (IJMET), Volume 4, Issue 1, January-February (2013), pp. 79-91

[4] C. Crnojevic, F. Decool, P. Florent, "Swirl measurements in a motor cylinder" Experiments in Fluids 26 (1999) 542Ð548 (Springer-Verlag1999)

[5] M. L. Mathur and R. P. Sharma, Internal Combustion Engine(Dhanpat Rai Publications LTD. New Delhi)

[6] V. Ganesan, I.C. Engines(Tata McGraw-Hill publication LTD. New Delhi)

ROBOTIC ARM CONTROL USING FUSION BAND AND HAND GESTURE RECOGNITION

Gaurav S. Sawarkar

Department of Communication Engineering YCC, Enagpur,(India)

ABSTRACT

Robots make our life easier. Engineering are up to the challenge, and over the past few years they have developed robotic hands with unprecedented strength and sensitivity. Sensor plays an important role in robotics. Robotic application demand sensors with high degrees of repeatability, precision, and reliability. The pick and place operation of the robotic arm can be efficiently controlled using fusion band. This design work is an educational based concept as robotic control is an exciting and high challenge research work in recent years. [1]Our robotic hand controlled wirelessly with fusion band works in synchronization with human hand and has precise and accurate movements with increased range.

Keywords: Accelerometer, CC2500 Wireless Module

I. INTRODUCTION

Robotic tele-operation indicates the remote manipulation of a robot by human operator at a distance. In some specific situation where human can't work directly, robots are used. For most people it is incredibly easy to move their arm. This nature ability can be exploited to give a human operator an easy to use interface to control a robot.

In this project, two sensor fusion input armband devices with the ability to be used by any individual with some level of arm movement and arm voluntary muscle contraction control will be used. The user hand motion will provide a natural and effective way to precisely manipulate the robot with very little training. The devices which will be used are GE-Fusion (Gyro and EMG fusion) and MEA-fusion (Magnetometer, EMG and Accelerometer) Bands, both combined into a small box.

[2]Hand gesture recognition provides an intelligent, natural and convenient way of human computer interaction. Sign language recognition (SLR) and gesture-based control are two major applications for hand gesture recognition technologies. There are two technique used, such as

1.1 Vision Base Gesture Recognition

In vision base gesture recognition, according to technology, computer visions capture the gesture of human hand and display to computer human perform in that time. This technology basically in the field of service robotic there are two gesture recognition methods first is the Temple base approach and natural base approach this is compared and combined with Viterbi algorithm for the recognition of gesture

.

1.2 Motion Capture Sensor Recognition

In motion capture sensor recognition, Accelerometer sensor used to sense the motion of human hand and creates three dimensional analog output voltages. Today accelerometer is small surface mount component. There are three axes X, Y, Z which is labeled in it. And flex sensor is used to control the wrist movement of hand.

II FUSION BAND

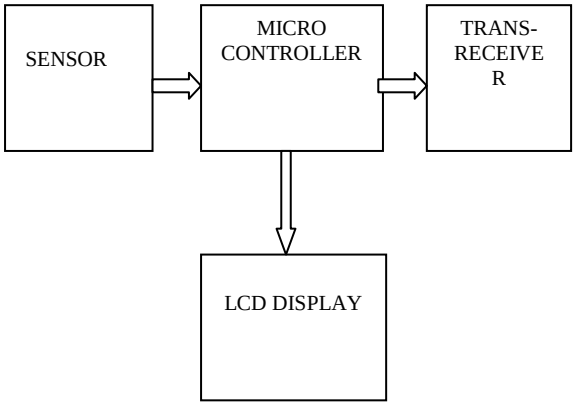

Fig. Block Diagram of Fusion Band

2.1 Sensor

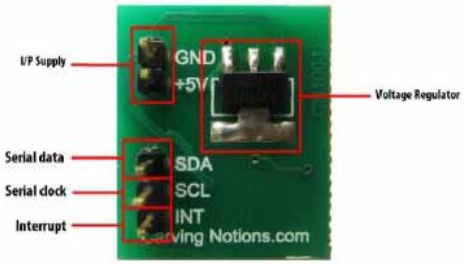

Fig. Accelerometer

EMG (Electromyography) sensor is muscle sensor to enhance control. It is measure very small electrical potential produce during muscle activation. Accelerometer is used to measure the rotation of human body and Magnetometer used to measured angle of body.

2.2 Microcontroller

ATmega16 microcontroller used as the hardware platform. It is controlling unit which all component such as Accelerometer, wireless module, servo motors are interface.

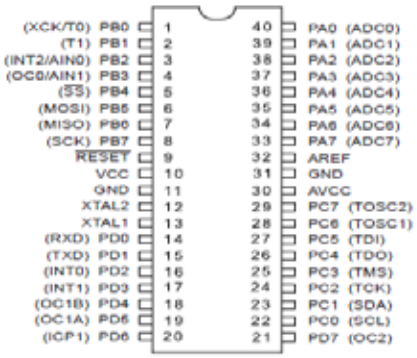

Fig. PIN diagram of ATmega16

2.3 CCC2500 Transreceiver Module

This module can be used for multi way wireless data transmission. It is small size and best range. In this module Up to 250 devices can communicate each other. It work at voltage 4.5 to 5.5Volts and operating range is 30 meter

Fig. CC2500 module

III DISSCUSSION ABOUT FUSION BAND

The device are called GE-Fusion (Gyro and EMG Fusion) and MEA-Fusion (Magnetometer, EMG and Accelerometer)

Bands both are combined into a small box[1]. However by combining sensor, such as combing Accelerometer and EMG sensor for sign language. Combining the Accelerometer and Gyro for motion analysis.

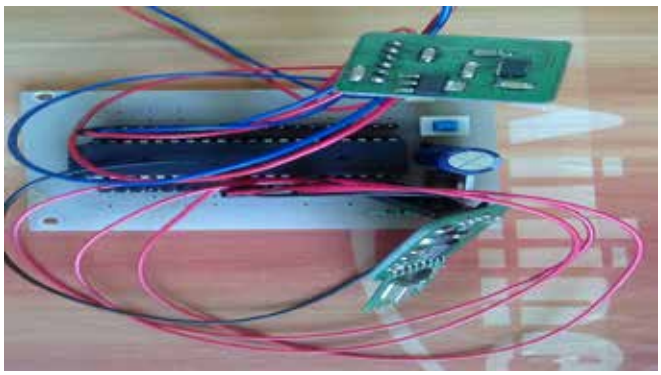

Fig.1

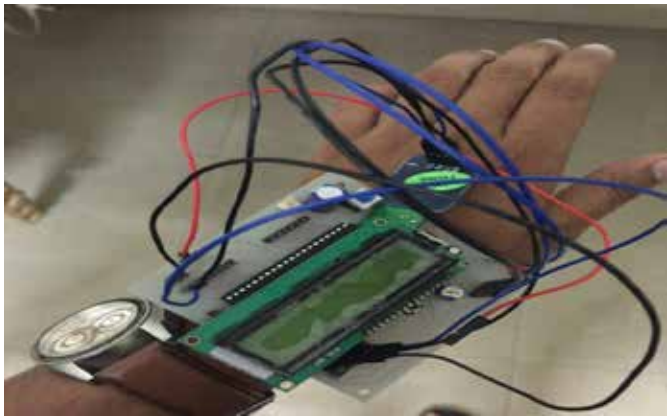

Fig.2

Fig. 1 & 2 fusion band

Yaw and Pitch motion was chosen for control purpose as shown in figure. The robotic arm can be rotate 180 degree of Yaw. To use the Fusion Band a portion of the arm must by movable in yaw (left/right) and pitch (up/down) direction as shown in figure. Fusion Band completely change the way we interacts with industrial machines and robots[1].

Fig. Fusion Band Freedom of Motion [Cut C IEEE 2012]

3.1 Robotic Arm

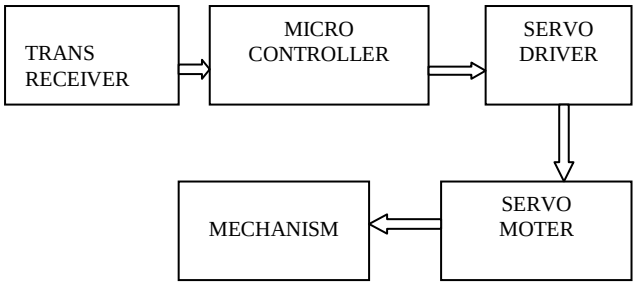

Fig. Block diagram of Receiver part of Robotic Arm

A robotic arm is a type of mechanical arm, usually programmable with similar function to a human arm. Most Robots in the world are design for heavy, repetitive manufacturing work. This task is difficult to handle or boring to human beings. The most manufacturing robot is robotic arm. The robot uses motion sensor to make sure it move just the right amount.

3.3 Servo Motor

Fig. Servo motor

Servo motor are uesd to control the finger movements and wrist movements of the hand. The Rc Servo motor usually have rotation limit from 90 to 180 degree. Servo motor do not rotate continually.

IV EXPECTED OUTCOME

A wireless robotic hand that will be designed to work in synchronization with human hand with precise and accurate movement will also employ a gesture base technique for effective control.

V CONCLUSION AND FUTURE WORK

In this paper, fusion band consists of magnetometer, accelerometer for motion control. Fusion band interface with human hand and capture the motion of human hand. The Fusion band are ideally suited to work with small devices.

In Future research, it include additional feature such as voice recognition to interaction. In future it will be work more range than this paper.

REFERENCE

[1] James Cannan, Huosheng Hu. “A Multi-Sensor Armband based on Muscle and Motion Measurements” IEEE International Conference on Robotics and Biomimetics. [2012]

[2] Wang Wen-hui Yang Ji-hai Vuokko Lantz-Wang Kong-qiao Zhang Xu, Chen Xiang “A Framework for Hand Gesture Recognition”.[2011]

[3] Kostas J. Kyriakopoulos Panagiotis K. Artemiadis “Estimating arm motion and force using emg signals: On the control of exoskeletons” IEEE International Conference on Intelligent Robots and Systems [2008]

[4] Xiang Zhang Weidong Geng Xiubo Liang, Shun Zhang. “Motion based perceptual user interface. [2009]

[5] Rene Winkler Johannes Schumm Martin Kusserow Holger Harms,” Oliver Amft and Gerhard Troester. Ethos: Miniature orientation sensor For wearable human motion analysis” [2010]

[6] Wang Wen-hui Yang Ji-hai Vuokko Lantz-Wang Kong-qiao Zhang Xu, Chen Xiang. "Hand gesture recognition and virtual game control based on 3d accelerometer and emg sensors" IEEE transaction on system [2009]

[7] Nikhil Kadam, Siddhesh Gaiki, Nupur Tupkar, Sakshi Hiwanj. Wirelessly Controlled Robotic Hand [2013]

EFFECT OF DEVELOPED FLUX AND PROCESS PARAMETERS ON HARDNESS OF WELD IN SAW

Gyanendra Singh[1], Vivek Mishra[2],Vijay Shankar Yadav[3]

[1] *Assistant Professor Mechanical Engineeering, Invertis University , Bareilly (India)*

[2,3] *Student, Mechanical Engineering ,Invertis University, Bareilly (India)*

ABSTRACT

In Submerged Arc Welding process flux always plays a vital role. Cost of flux nearly amounts to 50% of the total cost of the overall welding work and after welding the slag hence formed is totally a waste. The ingredients present in flux effects the chemical as well as mechanical properties of the weld bead without the use of different metal or alloy of desired properties. The slag if can be recycled and some ingredients (metal powder) can be added to it then we on one hand can reduce the cost of the process by recycling the waste slag and on the other hand getting the desired property. In the present research, Surface Response Methodology (RSM) is employed for conducting the experiments and analyzing the effect of process parameters (open circuit voltage, travel speed) and weight percentage of Chromium Carbide into the developed flux on the surface hardness of the weld using submerged arc welding process. A significant change in the surface hardness is been observed with the change of percentage of ingredients and process parameters. Therefore the welding cost and pollution caused by dumping of waste slag can be reduced, without any compromise in weld quality, by utilizing the developed flux, prepared from waste slag with the additional benefit of getting the desired properties as needed.

Keywords: Submerged Arc Welding, Flux, Hardness, Response Surface Methodology

I. INTRODUCTION

In submerged arc welding (SAW) produces a coalescence of metals by heating them with an arc between a bare metal wire (electrode) and the metal. The arc and molten metal are “submerged” in a blanket of fusible flux.[1] The primary function of the flux is to protect the weld pool from atmospheric contamination. It facilitates in a slower cooling rate resulting in the desired mechanical properties as well as metallurgical characteristics of the weldment. During welding, a portion of flux melts and gets adhered to the solidified weld pool. This fused flux, generally known as slag, is then detached and removed. The present work uses this waste slag for development of fresh flux and deciding the parameters for hardness in further runs of submerged arc welding.[2, 3]

Flux plays an important role in deciding the weld metal quality.[4] Flux constitutes half of the total welding cost in submerged arc welding. It greatly influence process usability and weld metal mechanical properties [5]. It has been reported that agglomerated fluxes produce weld deposits of better ductility and impact strength as compared with fused fluxes [6,7]. These fluxes are hygroscopic in nature, therefore baking is essential for good weld metal integrity [8]. Data and Bandyopadhyay [9] has performed optimization to determine the amount of waste slag and flux mixture that can be used without sacrificing any negative effect on bead geometry, compared to conventional SAW process, which consumes fresh flux only. Prashad and Dwivedi [10]

investigated the influence of submerged arc welding process parameters on hardness of steel weld bead.

II. EXPERIMENTATION

The Flux used in the present work was firstly prepared from used slag of SAW process. This slag was crushed and Chromium Carbide was added to it with other necessary ingredients and the treated such that the fresh agglomerated flux has been created. Chromium Carbide has a tendency to increase hardness penetration. Chromium Carbide can increase the toughness of steel, as well as the wear resistance. Probably one of the most well-known effects of chromium on steel is the tendency to resist staining and corrosion [11]. Although the excess of carbide will result in the brittleness of the steel, thus the percentage of Chromium Carbide addition should be optimum.

2.1 Identification of Parameters

For defect free, predictable, controllable and higher productive welding, identification of correct welding parameters which control the weld characteristics is essential. These parameters affect the weld metal chemistry, bead shape geometry, metal transfer characteristics, heat input and microstructure of the weld metal [12]. Amongst the welding parameters, arc voltage, travel speed and percentage addition of metal powder for flux were selected as these are independently controllable process variables. Their effect on the hardness of the weld metal was studied. These parameters were selected because these influence the penetration, deposition rate and chemical composition of weld metal. Open circuit voltage was considered in place of arc voltage for investigation because it varies linearly with arc voltage and can be controlled directly.

2.2 Selecting the Range of the Process Variables

The trial runs were conducted to select the range of the welding parameters. The range, covering the lowest and the highest level of the direct welding parameters, was carefully selected so as to maintain the equilibrium between the welding wire feed rate and burn-off rate. The basis of selection of given range for various welding parameters was that the selected range should be within the permissible limit of the parameters of the power source. Also the resultant weld should have good bead appearance, configurations and be free from visual defects viz, undercut, overlap, excessive crown height, surface porosity, non-uniform ripples, macro cracking etc. All the direct and indirect parameters except the ones under consideration were kept constant. The units, symbols, and the range of the factors (parameters) are given in Table 1.

The composition of the base plate which is used is been shown below in Table 2.

Table 1: Range of welding parameters

Parameter	Unit	Range	
		Lower value	Higher value
Metal Powder(m)	% by wt.	0	20
Open circuit voltage (V)	Volts	30	38
Travel speed(c)	m/hr.	22	26

Table 2: Composition of the Base Plate

Material	C	Mn	Si	S	P	Ni	Cr	Cu
Base plate	0.173	0.512	0.173	0.042	0.055	0.017	0.069	0.059

2.3 Conducting the Experiments

For welding purpose TORNADO SAW M-800 welding machine is used. This machine also had the provision for controlling the open circuit voltage, current and travel speed. The welds were laid by using 3.2 mm diameter copper coated M.S wire. The composition of the base plate is given in Table 4. The plate size used for bead on plate welds was 100 × 50 × 6 mm. Chromium Carbide was mixed with crushed slag in different percentages by weight. The welds were laid on the base plate using three passes; two were laid parallel and third was laid on the top of the two. Respond Surface methodology is employed to make design matrix for conducting experiments.

Response (hardness) is measured by the use of Rockwell Hardness Testing Machine in C-scale. The value of response is filled in design matrix and further analysis s done.

2.4. Result and Discussion

2.4.1 Effect of Metal Powder Addition to Flux on Hardness

The average values of hardness for metal powder addition to flux at levels 1, 2 and 3(0, 10, 20), and keeping the other factors (voltage and current) at '0' level are calculated and these values are plotted in Figure 1. It can be seen from the figure 1 that with the increase of metal powder percentage in the flux from 0% to 20%, hardness increases from 1st level to 2nd level and then from 2nd level to third level. An optimal value is reached at nearly 15% of metal powder .

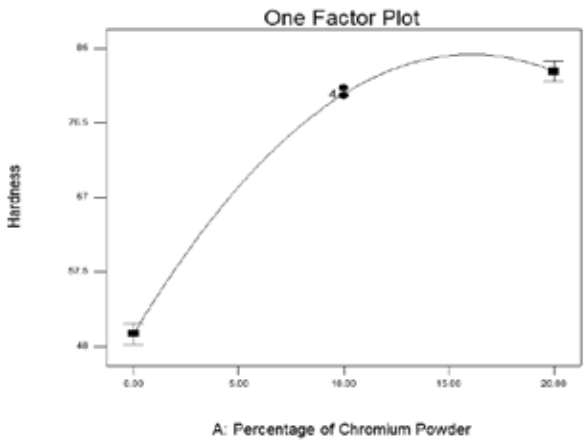

Fig. 1 Metal Powder V/S Hardness Graph, Effect Of Addition Of Metal Powder To Flux On Hardness

Keeping voltage, current and tip to work distance at constant, an increase in metal powder percentage in the flux increases the amount of alloying elements in the flux. During welding, when flux melts more alloying elements enters the weld metal which changes the weld metal composition. The value for hardness initially increases up

to a certain limit then it again decreases due to the excess of carbide in the flux which results in the brittleness of the weld bead.

2.4.2 Effect of voltage on hardness

The average values of hardness for voltage at levels 1, 2 and 3 (30, 34, 38), and keeping the other factors (current and metal powder) at '0' level are calculated and these values are plotted in Figure 2. It can be seen from the figure 2 that with the increase of voltage from 30V to 38V, hardness also increases from 1st level to 2nd level then increases from 2nd level to third level.

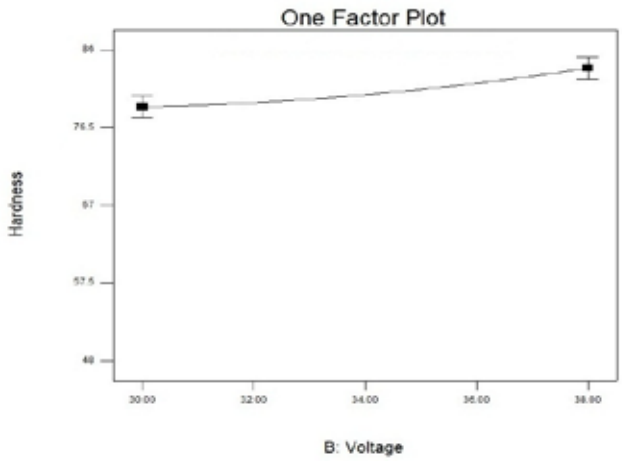

Fig. 2 voltage v/s hardness graph, effect of voltage on hardness

Increasing the arc voltage increases the arc length so that the weld bead width is increased, reinforcement is decreased and flux consumption is increased. Keeping tip to work distance, current and metal powder percentage constant, an increase in welding voltage results in melting of more flux due to which more alloying elements enter the weld metal. Thus arc voltage affects weld metal composition which increases the hardness of the weld metal.

2.4.3 Effect of Travel Speed on Hardness

The average values of hardness for travel speed at levels 1, 2 and 3(22, 24, 26), and keeping the other factors (voltage, percentage of metal powder and current) at '0' level are calculated and these values are plotted in Figure 3. It can be seen from the figure 3 that with the increase of travel speed of SAW machine, hardness increases from 1st level to 2nd level and then from 2nd level to third level.

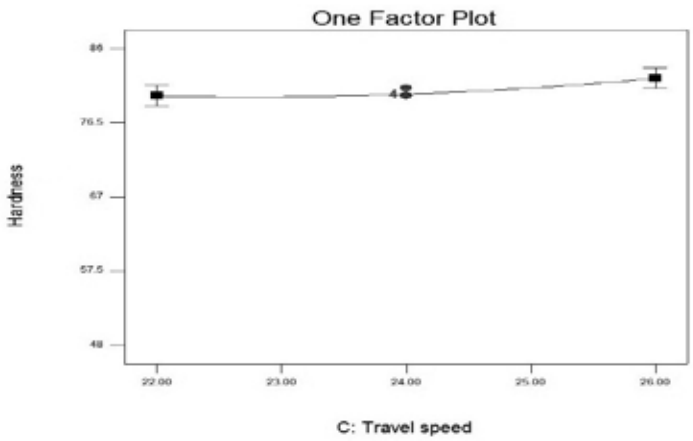

Fig. 3 Travel Speed V/S Hardness Graph, Effect Of Travel Speed On Hardness

Increasing the travel speed of SAW machine decreases the weld wire deposition on the bead and also results in increase in nozzle length to weld bead which results in increase in heat thus flux consumption is increased. Keeping voltage, tip to work distance, current and metal powder percentage constant, an increase in welding speed results in melting of more flux due to which more alloying elements enter the weld metal. Thus travel speed affects weld metal composition which increases the hardness of the weld metal.

III. CONCLUSION

The following conclusion can be drawn on bases of above analysis:-

1. The amount of chromium carbide addition in the flux and the open circuit voltage are found to affect the hardness of the weld metal significantly.
2. Hardness of the weld metal increases with the increase in the arc voltage.
3. Increase in travel speed also increases hardness of the weld metal.
4. An increase in the amount of chromium carbide in the flux increases the hardness of the weld metal upto a certain limit. On further addition of chromium carbide will result in decrease in hardness which may be probably due to being brittleness of the weld bead due to excessive carbide in it.

REFERENCES

1. Kook-soo Bang, Chan Park, Hong-chul Jung, Jong-bong Lee, “Effects of Flux Composition on the Element Transfer and Mechanical Properties of Weld Metal in Submerged Arc Welding”, Met. Mater. Int., Vol. 15, No. 3 (2009), pp. 471~477 doi: 10.1007/s12540-009-0471-3 Published 26 June 2009
2. Saurav Datta, Asish Bandyopadhyay, Pradip Kumar Pal, “Modeling and optimization of features of bead geometry including percentage dilution in submerged arc welding using mixture of fresh flux and fused slag, Springer-Verlag London Limited 2007
3. Livshit LG, Shiryaev AI, “A new ceramic flux for hardfacing”, Welding production, January 1960, pp 25–29
4. C.A. Bulter and C.E. Jackson, “Submerged arc welding characteristics of Cao-TiO2-SiO2 system,” Welding Journal, vol. 46, no. 5, 1967, pp 445-448.
5. Davis. Louise, “An introduction to welding fluxes for mild and alloy steels,” The welding institute, Cambridge, 1981
6. P.S. Vishvanath, “Submerged arc welding fluxes,” Indian Welding Journal, vol.15, no.1, 1982, pp. 1-11.
7. M.L.E. Davis and N. Baily, “Properties of submerged arc fluxes- A fundamental study,” Metal Construction, vol. 65, no.6, 1982, pp. 207-209.
8. Mohan. Narendra and Sunil. Pandey, “Welding current in submerged arc welding,” Indian Welding Journal, 2003, vol. 36, no. 1, 2003, pp.18-22.
9. S. Datta, Bandhopadhayaay, and P.K. Pal, “Modeling and optimization of features of bead geometry including percentage dilution in submerged arc welding using mixture of fresh and fused flux,” International Journal of advanced Manufacturing Technology, vol.36, no. 11, 2008, pp. 1080-1090.

10. K.Parshad, and D.K.Dwivedi, "Some investigations on microstructure and mechanical properties of submerged arc welded HSLA steel joints," International Journal of advanced Manufacturing Technology, vol. 36, no.5, 2008, pp. 475-483.
11. Surian E., Trotti A., Cassanelli A. and Devedia L.A. , " Infuluence of chromium on mechanical properties and microstructure of weld metal from a high-strength SMA electrode', Welding Journal 72(8), 1994 : pp. 45s-54s.
12. Pandey, N.D., Bharti, A. and Gupta, S.R. "Effect of submerged arc welding parameters and fluxes on element transfer behaviour and weld-metal chemistry". Journal of Materials Processing Technology, Volume 40, Issues 1-2: pp. 195-211 (1994).

CURRENT TRENDS IN DOMESTIC SOLAR WATER HEATING - CPC AN AMICABLE ALTERNATIVE, A PROPOSED DISTINCT DESIGN

Jaji Varghese[1], Dr.Samsher[2], Dr.Manjunath.K[3]

[1]*Department of Mechanical Engineering, Aryabhat Polytechnic, D.T.T.E, Delhi, (India)*

[2,3]*Department of Mechanical Engineering, Delhi Technological University,(India)*

ABSTRACT

The use of solar energy for power generation and thermal applications is a well-known concept. For households, the most commonly used is the flat plate collector which is normally fixed in position and to obtain maximum incidence of the solar radiation it has large surface area. These collectors thus have high first time capital and installation cost. High solar fraction and higher temperatures can be attained by use of reflectors. Research studies have been carried out and model validation done with symmetrical and asymmetrical type of reflectors. The better option is to choose a reflector with wider acceptance angle to offset loss of concentration ratio and positioning of tank on the reflector which would become easier. The model studied is batch type heater, as the receiver serves the dual purpose of absorber and storage tank, unlike conventional design which consist of a large number of smaller diameter tubes and separate storage tank. The concentrator i.e. the reflector in this case, is supported on a wooden cradle which comprises the two parabolas of the compound parabolic concentrator.

Keywords: Batch Type, Compound Parabolic, Domestic, Reflector, Solar Water Heaters

I. INTRODUCTION

Inspite of the efforts made by MNES, IREDA and other Govt. & Private agencies the concept of Solar Water Heating for domestic purposes is not widely acceptable. Even the global status report [1] published by REN21 (2010), depicting the average annual growth rates of renewable energy capacity, (2005-2010), the growth in solar water heating system is at standstill, (Year 2005- 16% & year 2010 also 16%) whereas there has been substantial growth in concentrated solar power (25% to 77%) and solar photovoltaic (49% to 72%). The reasons being high first time capital and installation cost; although operating cost is negligible it requires close monitoring as operating cost increases with poor up keeping and maintenance.

For households, generally two types of collectors are available in the market. The collector in most common use is the flat plate collector (FPC) because it is simple in design and has no moving parts but requires large surface area. The FPC are normally fixed in position and do not track the sun and to obtain maximum incidence of the solar radiation it has large surface area. But with large surface area, about 30-50 percent heat losses also occurs and mainly the convective and radiative losses from the front face of the collector. In this system the solar

radiation is asorbed by blackened metallic absorber sheets with built in channels or riser tubes to carry water. The absorber sheets absorb the radiation and transfer the heat to flowing water. The flowing water is then stored in a separate well insulated storage tank. The absorber is enclosed in a insulated outer metallic box covered on the top with glass. These systems are available in multiples of 100 litres per day LPD).

The other is the evacuated tube collector based solar water heater which consists of double layer evacuated borosilicate glass tubes having selective coating on the outer surfaces of inner tubes. These systems are less expensive but life of these systems is less than FPC system. These systems are available in any size i.e. 50, 75, 100, 125, 150 LPD etc.

To obtain higher collection efficiency better alternative is to go for concentrating collectors as it increases the intensity by concentrating the energy available over a large surface on to a smaller surface (absorber). Due to the concentration on a smaller area, the heat loss area is reduced. Further, the thermal mass is much smaller than that of a FPC and hence transient effects are small. The delivery temperatures being high, a thermodynamic match between temperature level and the task occurs. The present work is an attempt in this direction.

II. LITERATURE REVIEW

The success of any solar water heater system is envisaged only if it is capable of delivering hot water when needed and even during non-sunshine hours. The design therefore, should incorporate these two important criteria, a good solar fraction and good heat retention. A good solar fraction can be obtained by improved optical efficiency and heat retention by proper insulation and good thermal storage. Many techniques have been evolved to have good heat retention. To minimise the heat losses apart from the use of good insulation, Chaurasia and John Twidell [2] carried out studies to measure overall loss coefficient with simple glass glazing and with the the use of transparent insulation material (TIM). The effect of using TIM and varying its configuration within the collector has been studied by Reddy and Kaushika [3]. To minimize the nocturnal heat losses Shridhar and Reddy designed and developed a modified cuboid solar integrated-collector-storage (ICS) system with [TIM] transparent insulation material [4]. Abdul Jabbar Khalifa et al. [5] suggested DSWH's system with a back layer of phase change material (PCM), which yielded increase in plate temperature and better heat storage during off-sunshine hours. Hailliot..D et al. [6] evaluated the potential of compressed expanded natural graphite (CENG) and phase change material (PCM) composites to improve the performance of solar domestic hot water (SDHW) systems. Stratification increases the performance of solar systems.[7]. When tanks are horizontally placed, they are usually less stratified than when they are vertical. Carrilleo and Cejudo[6] used TRNSYS software to study a model, an indirect solar domestic hot water system with horizontal storage and a mantle heat exchanger. Soteris and Christos [8] did a simple model validation of a SWH consisting of two flat plate collectors using TRNSYS, the tool was used to optimise the design parameters and annual solar fraction obtained was 79%. Tank volume to collector area (V_t/A_c) ratio has also an important bearing on system performance for thermosyphon systems. Using TRNSYS simulation program, Sharaih and Lof [9] obtained optimum values for tank height and volume, which maximises the annual solar fraction for temperatures ranging from 50-80◦C. The positioning of the auxiliary heater within the tank, is also an important parameter thereby providing good thermal stratification. Shariah and Lof[10] made studies on the effects of auxiliary heater on annual performance of thermosyphon solar water heater simulated under variable operating conditions.

To obtain its wider acceptability in the domestic sector, the need is to improve the water temperature rise during the daily operation and water temperature preservation during the night. To increase the optical efficiency different designs of symmetrical and asymmetrical reflectors have been studied. Extensive study on domestic use of solar water heaters with stationary concentrating reflectors has been performed by Tripanagnostopoulos and Yianoulis [11, 12], presenting a new concept on ICS systems. Helal.O et al. [13] designed an ICS solar water heater based on three parabolic sections. The performance of the system is modelled by a simulation program written in MATLAB programming language and the results compared with the symmetric and asymmetric CPC reflectors of Tripanagnostopoulos model. Senthilkumar and Yasodha developed a three dimensional compound parabolic concentrator, with the CPC reflectors fabricated as horizontal segments instead of vertical segments. [14] Surface errors were thus reduced and optical efficiency increased. Lens walled CPC, a novel design by Yuehong sua et al. [15] with large acceptance angle applied to PV applications can be incorporated in the ICS design. Thermal performance of CPC with large acceptance angle has been studied by Jaji Varghese et al.[16] with mean daily efficiency of 37% and maximum water temperature 60^0C attained. Performance study on an ICS with single tube involute reflector was done by Schmidt and Goetzberger [17]. Such reflector has an acceptance angle of 180°. This means that even diffuse light which is scattered by the transparent insulation material is completely reflected onto the absorber. An annual SF of 0.65 and annual efficiency of 35% was obtained. The concept of using two storage tanks and based on the combination of asymmetric and symmetric CPC reflectors so as to obtain better water temperature stratification has been done by Tripanagnostopoulos and Souliotis. [18]

III. PRINCIPLE OF PROPOSED DESIGN

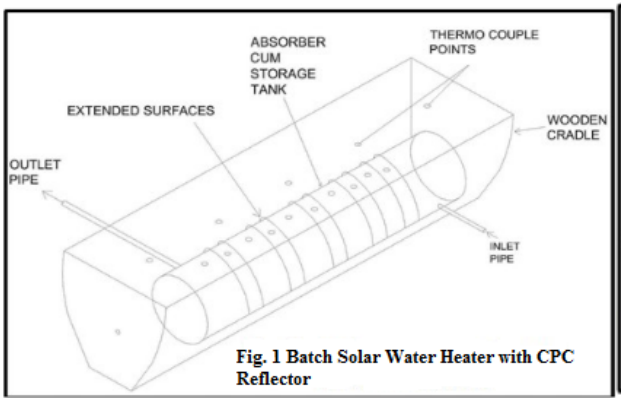

Fig. 1 Batch Solar Water Heater with CPC Reflector

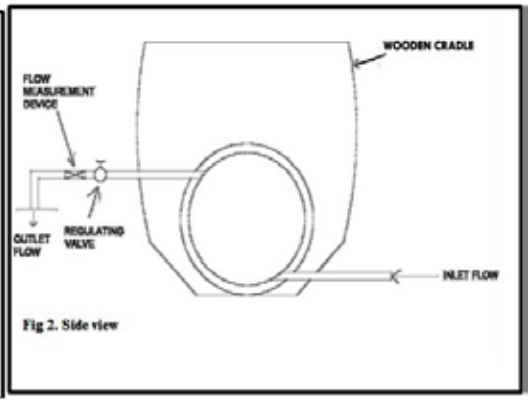

Fig 2. Side view

The present work is an integration of two concepts of solar water heating technology. One is the batch water heater concept (an ancient concept of solar water heating) also referred as built-in- storage water heater where the absorber and storage is a single unit. There is no separate storage tank. The basic principle is that the absorber which is a drum/tank is coated black, (unlike the small diameter tubes in the conventional Flat plate collectors), absorbs the incoming radiation and transmits the heat to water stored in it. The non-illuminated part is backed by insulation. Earlier designs had some portion of the non-illuminated part kept underground.

The other is by the principle of concentrating the radiation on to the receiver (absorber tank) with the help of a reflector also referred as concentrator. The collection efficiency is high and high temperatures can be attained.

The merits of these two systems have been incorporated in the present design. The elimination of separate storage tank (considerably brings down the cost of the system) and incorporating a reflector improves collection efficiency. With a concentrator lesser intercepting area for same temperatures is required which means lesser roof area. The only disadvantage is high night time or nocturnal heat loss which has been now the focus of study and a few methods have been suggested in the paper.

Like the Batch type heater it is a naturally circulated type with the inlet connected to the supply or overhead tank and the outlet regulated by a simple regulating valve. High solar fraction and higher temperatures can be attained by use of reflectors. Most research studies have been carried out and model validation done with symmetrical and asymmetrical type of reflectors with involute profile reflector or with three parabolic sections. But positioning of the tank becomes more cumbersome and compromise has to be done with regard to water temperature stratification and maximum water temperatures. The better option is to choose a reflector with wider acceptance angle to offset loss of concentration ratio and positioning of tank on the reflector which would become easier. Also the design would be easy to fabricate and economically viable. The reflector in this case, is supported on a wooden cradle which comprises the two parabolas of the CPC. The upper end points of the collector are parallel to the central plane of symmetry of the collector thus contributes little to the radiation reaching the absorber, and the CPC can be truncated to reduce its height resulting in saving in reflector area but little sacrifice in performance.

However, such systems suffer from heavy energy losses during night periods or during insufficient radiation. No matter how well insulated the rear and sides of the collector might be; its solar collecting face would constitute a significant source of night time heat loss. As a result, the water temperature would drop by considerable amounts overnight, often leaving little, if any useful energy, the next morning. The thermal protection of the water storage tank is difficult as a significant part of the external surface is used for the absorption of solar radiation contrary to that of the FPC systems, where the hot water is stored in a separate storage tank which is thermally insulated. In this system also referred as integrated collector storage ICS), the opaque thermal insulation can be provided only on the non-illuminated part. Thus, although ICS system has simple construction, installation and operation are less applied than FPC systems as it presents high thermal losses during night or non-sunshine hours. Thus, good thermal heat retention and to suppress nocturnal heat loss is an increasingly important entity in BSWH systems.

In the present design side wall thermal resistance comprises of 4cm wood, 10 cm air gap and 6.5 cm glass wool insulation. The front and back portion are backed by wood and glass wool insulation. To suppress the nocturnal heat loss conventional techniques can be used but the results can be more encouraging if in addition to these conventional techniques, the thermal inertia of the collector can be increased by application of the concept of thermal mass in the design. Thermal mass is a concept in building design that describes how the mass of the building provides inertia against temperature fluctuations, sometimes known as the thermal flywheel effect. This concept has been incorporated in the proposed design by the use of Insulated Concrete Form (ICF). These forms (ICF) are interlocking modular units that are dry-stacked (without mortar) and filled with concrete that stays in place as permanent interior and exterior substrates on walls, floors and roofs. The same can be placed as extended surfaces on the exterior of the tank, thereby increasing the thermal capacity as shown in Fig.1.

IV. CONCLUSION

The advantages of this heater is that it is simple in design as it requires no pumps, blowers, differential thermostats or other externally powered devices and can be built from locally available material with moderate carpentry and plumbing skills. Also the absence of a separate storage tank cuts down the cost considerably.

By utilizing the CPC concept in reflector design, increases the collection efficiency due to increase in the concentration ratio and also minimum of tracking required due to increased acceptance angle. In conventional CPC solar collector to avoid the thermal losses a gap of few millimeters is provided between the small diameter tubular absorber and the reflector. But due to this the optical losses of the collector are increased. In the proposed design, the gap between the absorber and the reflector has less significance, as it is too small compared with the diameter of the cylindrical storage drum. The benefit of thermal mass concept can be envisaged which flattens out the nocturnal heat loss variations to desirable extent.

Also in regions where quality of water is a concern, especially in developing countries, where scaling in the collector systems results in the poor performance. Here it is not a matter of grave concern due to the presence of a larger diameter drum, unlike built in channels or smaller diameter riser tubes in conventional collectors.

Thus this system can be an amicable alternative to the conventional FPC/ETC for domestic purposes.

REFERENCES

[1] Manual of Solar Water Heater, (2013), Delhi energy efficiency and renewable energy management centre, Govt. of NCT, Delhi.

[2] Chaurasia.B.L, John Twidell, Collector cum storage solar water heater with and without transparent insulation material, Solar Energy, Vol.70, No.5, (2001), pp.403–416.

[3] Reddy.K.S, Kaushika.N.D, Comparative study of transparent insulation materials cover systems for integrated-collector-storage solar water heaters, Solar Energy Materials & Solar Cells, Vol.58, (1999), pp.431-446.

[4] Sridhar.A, Reddy.K.S, Transient analysis of modified cuboid solar intergrated collector storage system, Applied Thermal Engineering, Vol.27, (2007), pp.330–346.

[5] Abdul Jabbar Khalifa.N, Kadhim Suffe.H, Mahmoud Sh. Mahmoud, A Storage domestic solar hot water system with a back layer of phase change material, Experimental Thermal and Fluid Science, Vol.44, (2013), pp.174-81.

[6] Haillot.D, Nepveu.F, Goetz.V, Pya.X, Benabdelkarim.M, High performance storage composite for the enhancement of solar domestic hot water systems, Solar Energy, Vol.86, (2012), pp.64–77.

[7] Carrilleo Andres.A, Cejudo Lopez.J.M, TRNSY model of a thermosyphon solar domestic water heater with a horizontal store and mantle heat exchanger, Solar Energy, Vol.72, No. 2, (2002), pp.89–98.

[8] Soteris Kalogiroua.A, Christos Papamarcou, Modelling of a thermosyphon system and simple model validation, Renewable Energy, Vol.21, (2000), pp.471-493.

[9] Shariah.A.M, LOF, The optimisation of the tank volume-to-collector area ratio for a thermosyphon solar water heater, Renewable Energy, Vol.7, No.3, (1996), pp.289-300.

[10] Shariah A.M, Lof.G, Effects of Auxillary Heater on annual performance of thermosyphom SWH simulated under variable operating conditions, Solar Energy Vol. 60, No.2, (1997), pp. 119-126.

[11] Souliotis.M, Quinlan.P, Smyth.M, Tripanagnostopoulos.Y, Heat retaining integrated collector storage solar water heater with asymmetric CPC reflector, Solar Energy, Vol.85, (2011), pp.2474–2487.

[12] Souliotis Chemisana.D, Caouris Y.G, Tripanagnostopoulos.Y, Experimental study of integrated collector storage solar water heaters, Renewable Energy, Vol.50, (2013), pp.1083-1094.

[13] Helal.O, Chaouachi.B, Gabsi.S, Design and thermal performance of an ICS solar water heater based on three parabolic sections, Solar Energy, Vol.85, (2011), pp.2421–2432.

[14] Senthilkumar.S, Yasodha.N, Design and Development of a Three Dimensional Compound Parabolic Concentrator and Study of Optical and Thermal performance, International Journal of Energy Science, Vol.2, 2012, pp.64-68.

[15] Yuehong Sua, Saffa Riffat.B, Gang Peia, Comparative study on annual solar energy collection of a novel lens-walled compound parabolic concentrator (lens-walled CPC), Sustainable Cities and Society, Vol.4, (2012), pp. 35– 40.

[16] Jaji Varghese, Gajanan Awari.K, Mahendra Singh.P, Experimental analysis of a distnct design of a batch solar water heater with integrated collector storage system, Thermal Science, Vol.11, (2007), No. 4, pp.135-142.

[17] Schmidt.C, Goetzberger.A, Single tube integrated collector storage systems with transparent insulation and involute reflector, Solar Energy, Vol.45, (1990), pp.93-100.

[18] Tripanagnostopoulos.Y, Souliotis.M, ICS Solar systems with two water tanks, Renewable Energy, Vol.31, (2006), pp.1698–1717.

DESIGN AND ANALYSIS OF LOW POWER CHARGE PUMP CIRCUIT FOR PHASE-LOCKED LOOP

[1] B. Praveen Kumar, [2]G.Rajarajeshwari, [3]J.Anu Infancia

[1, 2, 3]PG students / ECE, SNS College of Technology, Coimbatore, (India)

ABSTRACT

CMOS is used to construct the integrated circuits with low level of static leakage. With this low level leakage we are designing all the transistor circuits in CMOS logic. To control this static leakage in the circuits the supply voltage is a major concern. Here the step-up converters with charge pump and the level for maintaining its threshold voltage (V_T) is to be analyzed and proposed. Here we are going to propose the novel approach as body bias effect and sub-threshold logic. This will be applied for the step-up converters for energy harvesting applications. The backward control is to be processed for control the internal voltage when the charge transfer switch could be in activation. This will be used to boost the voltages from the circuit for step-up converters. When the supply voltage is to be raise from the fixed voltage level it will be turn OFF the transistor. The maximum level of the converters circuits contain the branch A and branch B which could be contains all p-MOS and n-MOS combinations. The oscillator circuit also to e designed and applied to the proposed six stage charge pump circuit to reduce the power consumption. To reduce the standby mode leakage we are designing the circuit by using power gating logic. These circuits are to be designed and verified by using the TANNER T-SPICE TOOLS.

Keywords: Body Bias, Sub Threshold, Linear Charge Pump.

I. INTRODUCTION

A charge pump circuit provides a voltage that is higher than the voltage of the power supply or a voltage of reverse polarity. In many applications such as Power IC, continuous time filters, and EEPROM, voltages higher than the power supplies are frequently required. Increased voltage levels are obtained in a charge pump as a result of transferring charges to a capacitive load and do not involve amplifiers or transformers. For that reason a charge pump is a device of choice in semiconductor technology where normal range of operating voltages is limited.

Charge pumps usually operate at high frequency level in order to increase their output power within a reasonable size of total capacitance used for charge transfer. This operating frequency may be adjusted by compensating for changes in the power requirements and saving the energy delivered to the charge pump.

The charge pump employs either low quiescent current Burst Mode operation or low noise constant frequency mode. In Burst Mode operation the charge pump VOUT regulates to –0.94 • VIN, and the Charge pump draws only 100µA of quiescent current with both LDO regulators on. In constant frequency mode the charge pump produces an output equal to –VIN and operates at a fixed 500 kHz or to a programmed value between 50kHz to 500kHz using an external resistor. The Charge pump is available in low profile (0.75mm) 3mm x 4mm 14-pin DFN and thermally enhanced 16-pin MSOP packages.

The charge transfer frequency can be adjusted between 50 kHz and 500 kHz using an external resistor on the RT pin. At slower frequencies the effective open-loop output resistance (ROL) of the charge pump is larger and it is able to provide smaller average output current. It can be used to determine a suitable value of RT to achieve a required oscillator frequency. If the RT pin is grounded, the part operates at a constant frequency of 500 kHz.

.

II. EXISTING SYSTEM

2.1 Dickson Charge Pump

The Dickson charge pump and single cascade charge pump, shown in fig 1. , are derived from the ideal diode charge pump architecture. Both circuits output voltage obey equation that can be simplified as in equation.

$$Vout = VDD – Vth(0) + \Sigma [\alpha VDD – Vth(i)] \ldots\ldots (1)$$

$$Vout = VDD + n (VDD-Vth) \ldots\ldots\ldots\ldots (2)$$

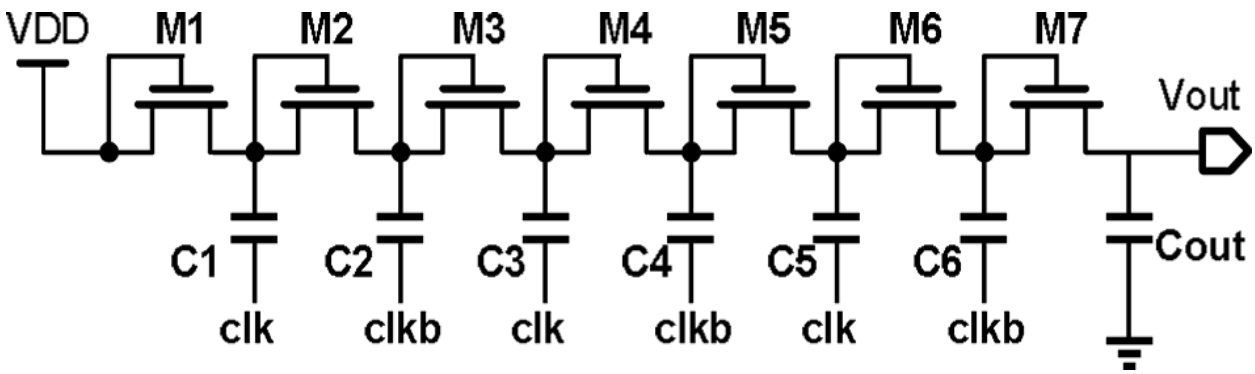

Fig 1. Dickson Charge Pump

The term VDD-Vth is called the voltage gain per unit stage. Note that this gain is additive and not multiplicative as in the voltage doubler architecture. In the Dickson charge pump, as the voltage of each stage increases, the threshold voltage of the diode-connected MOSFET increases due to body effect, and the voltage gain decreases as the number of stages increases. This effect is not present with the single cascade architecture. For large number of stages (>10), the Dickson charge pump has an average voltage gain of 0.25*VDD, while the single cascade circuit produces an average gain of 0.5*VDD.

2.2. Wu Chang Charge Pumps

A charge pump circuit provides a voltage that is higher than the voltage of the power supply or a voltage of reverse polarity. In many applications such as Power IC, continuous time filters, and EEPROM, voltages higher than the power supplies are frequently required.

Increased voltage levels are obtained in a charge pump as a result of transferring charges to a capacitive load and do not involve amplifiers or transformers. For that reason a charge pump is a device of choice in semiconductor technology where normal range of operating voltages is limited. Charge pumps usually operate at high frequency level in order to increase their output power within a reasonable size of total capacitance used for charge transfer.

Six consecutive stages of the charge pump of are shown in Fig. 1. Assume the circuit is in steady-state. When CLK changes from 0 to VDD (when CLKB, the inverse of CLK, falls), the nth stage output, V, increases by CV and the voltages of neighboring stages reduce by the same amount. Consequently, the auxiliary NMOS switch, for the control of nth charge transfer switch, turns on by Vn-Vn-1 = 2CV and the PMOS switch, PMOS, turns off. Thus, V falls from Vn+1 to Vn-1 and turns off NMOS, and Vn-1 and Vn+1 rise to turn on the (n-1) th and (n+1) th charge transfer switches, PMOS and NMOS. Hence, the (n+1)th stage is charged up to the peak voltage of V. Similarly, when CLK falls (CLKB rises), Vn+1 is charged by CV. Thus, the output voltage of the charge pump with n stages is determined.

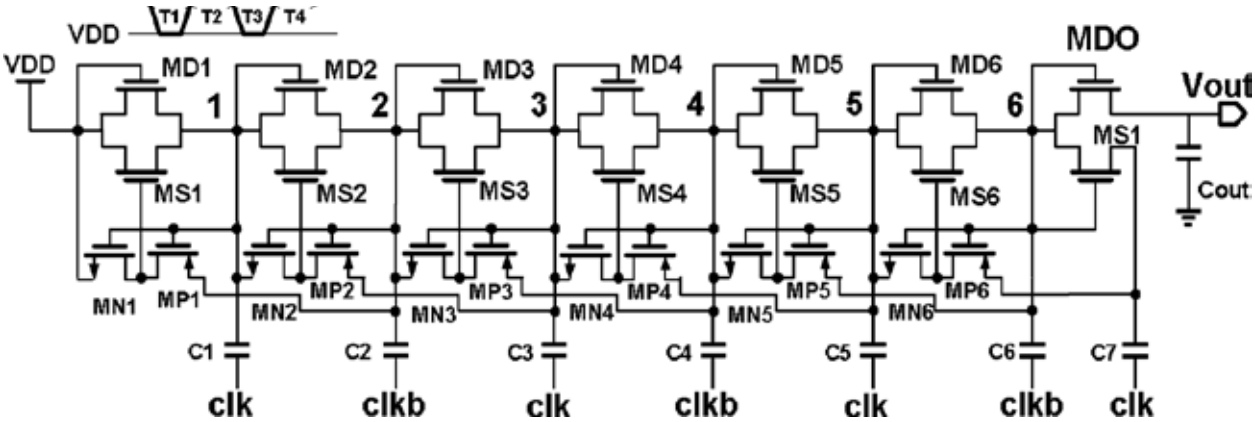

Fig.2 WU CHANG charge pump

Ideally, CV should be close to VDD. However, the parasitic capacitance at each node and the unwanted reverse currents cause CV to be smaller than VDD. Since the parasitic capacitance effect is not significant and can be overcome with ease by increasing unit capacitance Cu, the reverse current effect becomes the dominant loss factor.

2.3. Linear Charge Pumps

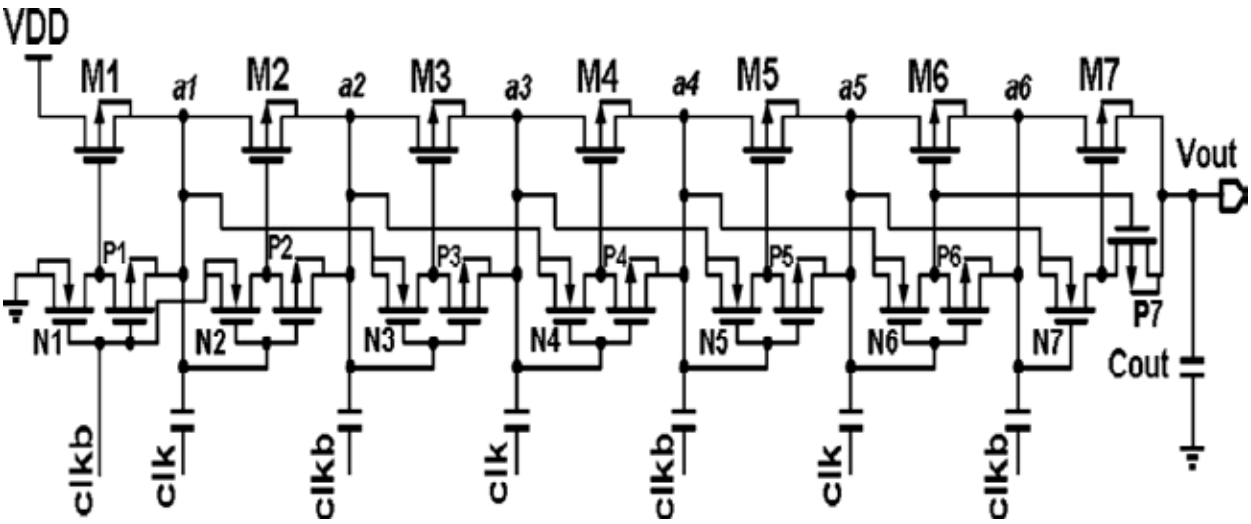

Fig.2 Linear charge pump

The charge pump was not an acceptable solution, until now .The minimum additional requirement was a linear regulator for stabilizing the output voltage. Newer charge pumps are regulated internally and can deliver substantially higher output currents. This way charge pumps are becoming more viable in applications that have been the domain of inductive DC/DC converter. This topic will give an overview on which topologies are used, how charge pumps are regulated and how external capacitors influence the performance of the system.

The main drawback of this topology is constituted by the parasitic capacitances which affect the behavior and performance more than the other topologies. Indeed, as demonstrated in, the reduction of the output voltage with respect to an ideal charge pump (i.e., without parasitic capacitances) strongly increases by increasing the number of stages. Moreover, another critical aspect concerns the switches implementation.

III. PROPOSED SYSTEM

The proposed two branch and six stages of charge pump has been analyzed and this could be uses the body bias effect and the backward control scheme for low power consumption and high amplification. Ignoring leakage effects, this effectively provides double the supply voltage to the load (the sum of the original supply and the capacitor). And also the Charge pumps offer high-efficiency and compact solutions for applications with generally low-output current requirements. This Regulated output charge pumps maintain a constant output with a varying voltage input. This high level of amplification gives the linear output of the all level implementation from the designed circuits. And also this proposed charge pump cannot give any errors or damage during the manufacturing process. The implementation level could be modified when we are designing this charge pump with more number of stages.

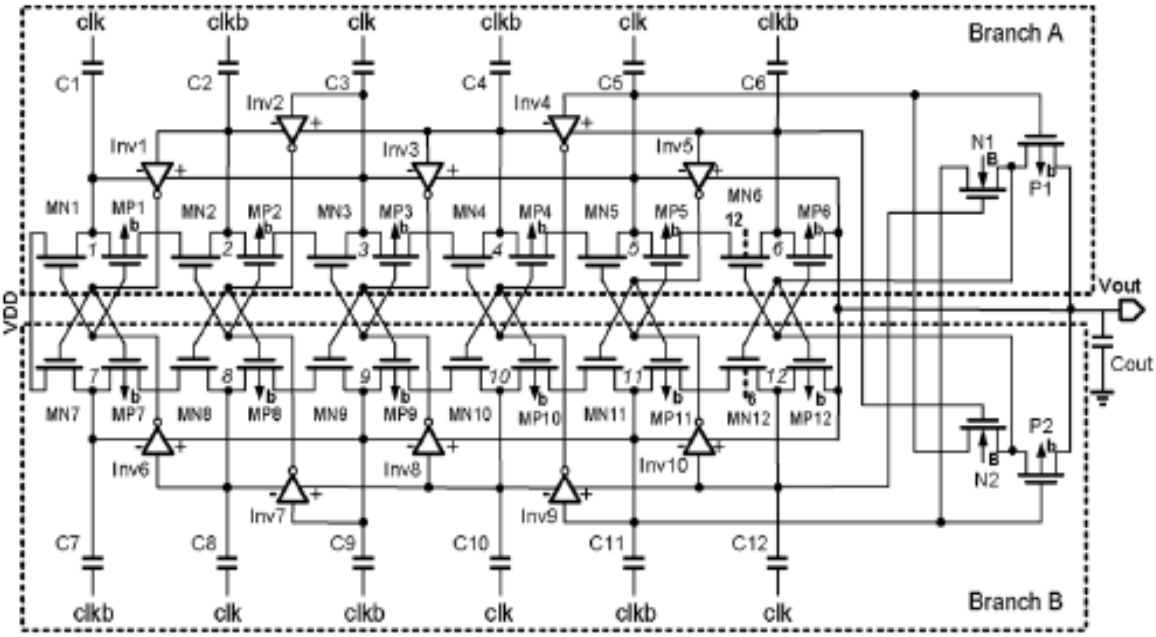

Fig.4 proposed charge pump circuit by using sub-threshold logic

A charge pump circuit provides a voltage that is higher than the voltage of the power supply or a voltage of reverse polarity. In many applications such as Power IC, continuous time filters, and EEPROM, voltages higher

than the power supplies are frequently required. Increased voltage levels are obtained in a charge pump as a result of transferring charges to a capacitive load and do not involve amplifiers or transformers.

IV. SIMULATION RESULT

The new charge pump circuit is designed in TSMC CMOS process, simulated using T-Spice under a 2 mv power supply. This low voltage input supply gives the high amplification stages of the proposed charge pump. The operating frequency is 1000Hz and Fig. shows the charging and discharging result of the new charge pump circuit. The output voltage range is from 995mV up to 1010mV.

The parameter values has been analyzed and tabulated below. This could be a parameter gain of the all charge pump circuits with the input voltage and the output voltage variation of the all other degradations

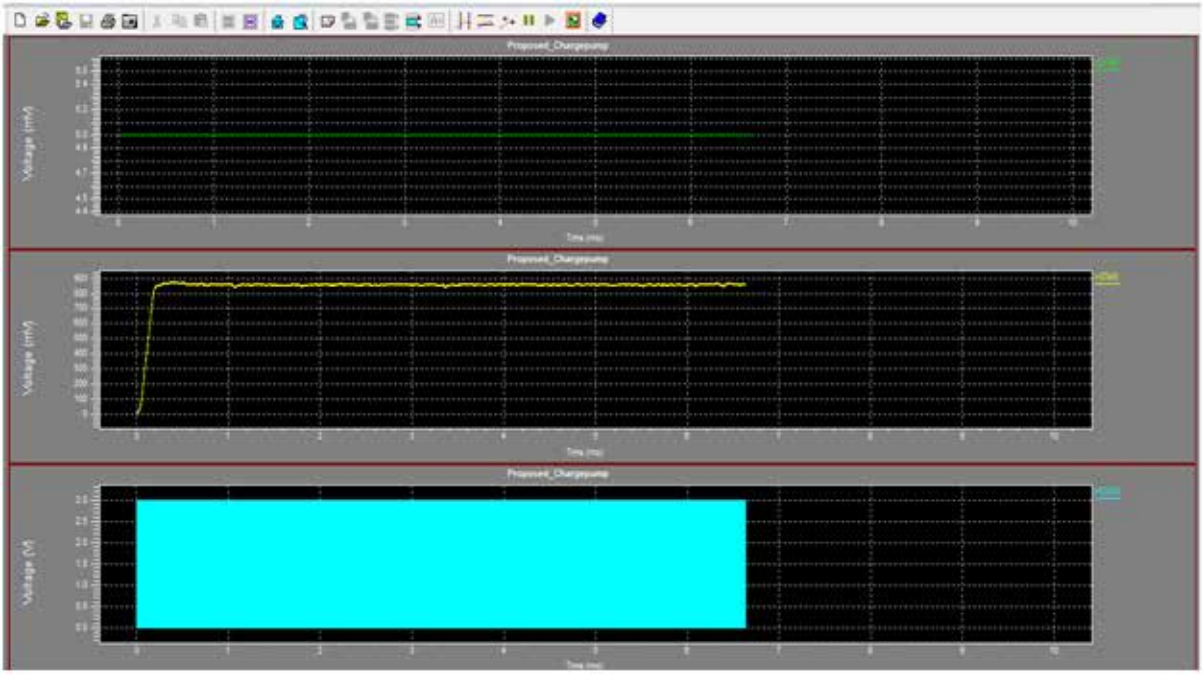

Fig.5 simulation result of proposed system

V. COMPARISION TABLE

CHARGE PUMP	POWER	AMPLITUDE
Dickson charge pump	8.60 W	50 mV
Wu_Chang charge pump	8.04 W	20mV
Linear charge pump	5.84 W	100mV
Proposed charge pump	3.29 W	1000mV

IV. CONCLUSION

Charge pump based on body biasing and the backward control scheme has been proposed in this system. The power and the amplification could be efficient when compared to the other existing charge pump. The low output ripple and high system stability of the dual-phase charge pump circuit are demonstrated by the test chip and get better performance. Therefore, the transient response and driving capability can be improved. Besides, only one closed-loop regulation is utilized to generate the charge pump circuit so as to improve the power conversion efficiency. By using this efficiency calculation the pumping efficiency also calculated and gets the detailed configuration of the proposed charge pump parameter evaluation. The degradation of the amplification could be highly reduces and it could be generated as per the test identification stages proposed in the charge pump design circuit. This circuit could be further used for the implementation of the like PLL based analog devices.

REFERENCES

[1] C.Alippi and C.Galperti, "An adaptive systemfor optimal solar energy harvesting in wireless sensor network nodes," *IEEE Trans. Circuits Syst.—I*, vol. 55, no. 6, pp. 1742–1750, Jul. 2008.

[2] C. Donovan, A. Dewan, H. Peng, D. Heo, and H. Beyenal, "Power management system for a 2.5W remote sensor powered by a sediment microbial fuel cell," *J. Power Source*, pp. 1171–1177, 2011.

[3] C. Donovan, A. Dewan, D. Heo, and H. Beyenal, "Battery less, wireless sensor powered by a sediment microbial fuel cell," *Environmental Science and Technology*, vol. 42, no. 22, pp. 8591–8596, 2008.

[4] P. H. Chen *et al.*, "Startup techniques for 95 mV step-up converter by capacitor pass-on scheme and -tuned oscillator with fixed charge programming," *IEEE J. Solid-State Circuits*, vol. 47, no. 5, pp. 1252–1260, May 2012.

[5] E. J. Carlson *et al.*, "A 20 mV input boost converter with efficient digital control for thermoelectric energy harvesting," *IEEE J. Solid-State Circuits*, vol. 45, no. 4, pp. 741–750, Apr. 2010.

[6] Y. O. Ramadass and A. P. Chandrakasan, "A battery-less thermoelectric energy harvesting interface circuit with 35 mV startup voltage," *IEEE J. Solid-State Circuits*, vol. 46, no. 1, pp. 333–341, Jan. 2011.

[7] J. Holleman *et al.*, "A compact pulse-based charge pump in 0.13 m CMOS," in *Proc. IEEE Custom Int. Circuits Conf.*, 2007, pp. 381–384.

[8] A. Worapishet and J. B. Hughes, "Performance enhancement of switched-current techniques using sub-threshold MOS operation," *IEEE Trans. Circuits Syst.—I*, vol. 55, no. 11, pp. 3582–3592, Dec. 2008.

[9] F. Pan and T. Samaddar, *Charge Pump Circuit Design*. NewYork: McGraw-Hill, 2006.

[10] *Jazz Semiconductor Design Application Manual*. Newport Beach, CA: Jazz Semiconductor Products Inc., 2012.

[11] J.-T. Wu and K.-L. Chang, "MOS charge pump for low voltage operation," *IEEE J. Solid-State Circuits*, vol. 33, no. 4, pp. 592–597, Apr. 1998.

[12] L. Su and D.-S. Ma, "Design and optimization of integrated low-voltage low-power monolithic CMOS charge pumps," in *Proc. Int. Power Electron., Electrical Drives, Automation Motion*, 2008, pp. 43–48.

[13] F. Su andW.-H. Ki, "Gate control strategies for high efficiency charge pumps," in *Proc. Int. Symp. Circuits Syst.*, 2005, pp. 1907–1910.

[14] M.-D. Ker, S.-L. Chen, and C.-S. Tsai, "Design of charge pump circuit with consideration of gate-oxide reliability in low-voltage CMOS process," *IEEE J. Solid-State Circuits*, vol. 41, no. 5, pp. 1100–1107, May 2006.

[15] B. Razavi, *Design of Analog CMOS Integrated Circuits*. New York: McGraw-Hill, 2001.