MOBILE MULTIUSER DETECTION TECHNIQUE

Dinesh A. Kene[1], Dr. D.J. Pete[2]

[1]Student (ME), [2](HOD), Electronics and Telecommunication Engineering Department, Datta Meghe College of Engineering, Airoli, Navi Mumbai, University of Mumbai, Maharashtra (India)

ABSTRACT

In mobile / cellular networks the multiuser detection technology emerged in early 80s. it is now developed in to an important full-fledged field in multi-access communication. In the conventional single user detector in DS-CDMA system, MAI and near-far effect cause limitation of capacity. On the other hand the optimal MUD suffers from computational complexity that grows exponentially with number active user. During a last two decade there has been a lot of interest of sub optimal multiuser detector which are low in complexity but deliver negotiable performance. This topic highlighted various detection techniques. As in Multiuser MIMO system a base station equipped with multiple antennas serves a number of users. Conventionally the communication between the BS and the user is performed by orthogonalizing the channel so that the BS communicates with each user in separate time frequency resources. This is not optimal from an information theoretic point of view and high rate can be obtained, if the BS communicates with several users in same time frequency response.

Keywords: Direct Spread Code Division Multiple Access, Multiple Input Multiple Output, Multi-Access Interference, Successive Interference Canceller-SIC, Parallel Interference canceller-PIC

I. INTRODUCTION

Multiuser detection refers to detection of data from multiple users when observed in a non-orthogonal multiplex. Multiuser Detection provides the first comprehensive treatment of the subject of multiuser digital communications. Multiuser detection deals with demodulation of the mutually interfering digital streams of information that occur in areas such as wireless communications, high-speed data transmission, satellite communication, digital television, and magnetic recording. The development of multiuser detection techniques is one of the most important recent advances in communications technology. Multiuser detection (also known as joint detection) is one of the receiver design technologies for detecting desired signal(s) from interference and noise. Traditionally, single-user receiver design is known to suffer from the so-called near-far problem, where a nearby or strong signal source may block the signal reception of a far-away or weak signaled user. The near-far problem is more serious in CDMA type wireless multiuser communication systems. Multiuser detection techniques can help the receiver solve this problem. MUD is basically the design of signal processing algorithms that run in the black box shown in figure 1. These algorithms take into account the correlative structure of the MAI.

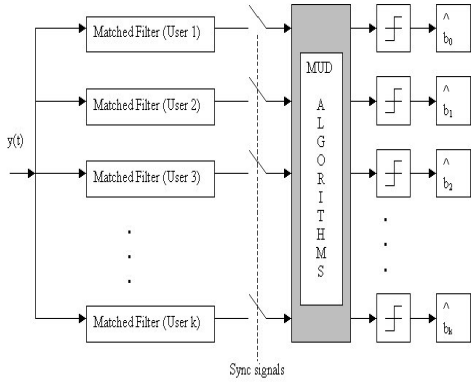

As shown each match filter (1,2,--- k) act as typical frequency receiver or detector , so that all frequency signals from the stream are selected, no frequency signals are rejected. Code Division Multiple Access (CDMA) is a widely used technique for multiple access communication in wireless systems. It differs from the classical Time Division Multiple Access (TDMA) and Frequency Division Multiple Access (FDMA) in the sense that all users transmit across the entire frequency band (unlike FDMA) and many users can transmit simultaneously (unlike TDMA). The user data is separated on the basis of signature waveforms assigned to each user. These waveforms should be mutually orthogonal to each other so as to eliminate any interference among different user's data.

II. LITERATURE SURVEY

Shaowei Wang and Hualai Gu Shows in their paper "Multiuser Detection with Sparse Spectrum Gaussian Process Regression," that multiple user can be detected by Sparse Spectrum Gaussian process using Gaussian detector. [1]. Hein Quoc Ngo, et al. explained multiuser detection techniques in their paper "Energy and Spectral Efficiency of Very Large Multiuser MIMO System," where they used Multiple input Multiple output antenna system for multiple user detection. [2] Yao Xie Yonina C. Elder, and Andrea Goldsmith shows reduced dimension method for multi user detection in their paper "Reduced-Dimension Multiuser Detection," [3] Avi Steiner, et al. used successive cancellation method in their paper "The Spectral Effeciency of Successive Cancellation with Linear Multiuser Detection for Randomly Spread CDMA," where they used linear multiuser detector for random spread CDMA. [4] Sandra Roger, Daniel Calabuig in their paper,"Multiuser Non-Coherent Detection for Downlink MIMO Communication," used non-coherent detection method for multiuser detection. [5] S. Niranjayan, And Norman C. Beaulieu in their paper , "Novel Adoptive Nonlinear Receiver for Multiple Access Communication," shows adaptive nonlinear receiver for multiuser detection. By all this method it is proved that multiple users with different frequencies can be detected or given access at a same instant of time so that system capacity as well the speed of the system can be increase.

III. CONVENTIONAL DETECTOR

The conventional DS-CDMA detector follows single user detection strategy in which each users is detected separately without regards of the other users. A better strategy is multiuser detection, where information about multiple users is used to improve detection of each individual user. In DS-CDMA users are multiplexed by distinct codes rather than by orthogonal frequency bands or by orthogonal time slots. As conventional DS-CDMA detector follows a single user detection strategy , in which each user is treated separately , while considering other users as interference or noise. [1-4] MAI is the interference between the active users and

causes timing offsets between signals. Conventional detectors detect each user separately and don't consider the MAI. Due to this, multiuser detection techniques have been developed. [2]

Multi access interference (MAI)

- **A** factor to limit the capacity and performance of DS – CDMA systems
- MAI comes from the random time offsets between signals, which results in the impossibility to design completely orthogonal code waveforms
- Conventional detector does not take the MAI existence into account – single user detection, (not take other users into account)
- Better strategy is one of multiuser detection to gain more additional benefits for DS -CDMA
- Multiuser detection also referred to joint detection or interference cancellation
- MAI can incur the near - far problem

IV. OVERVIEW OF MUD

The conventional Matched filter suffers many drawbacks due to MAI because it was designed for orthogonal signature wave form, it does not take in to account the non-orthogonal signals. Multiusers signal processing techniques response to non-orthogonal so that MAI terms and hence design system which offers better performance than the conventional matched filter detector.

The optimum receiver to detect bits of multiple code division multiple access (CDMA) the users has exponential complexity in the number of active users in the system. Due to that many sub-optimum receivers have been developed to achieve good performance with less complexity. The solution for the optimum multi-users detection problem (OMUD) using non-linear programming relax-actions is under study. The original optimum multiuser detection (OMUD) is a 0-1 quadratic program for which there exists no efficient algorithm. The general approach in the presence of such problem is to approximate the solution by working on an easier problem that can be solved efficiently. The easiest problem to be solved is relaxation of the original problem. The relaxed solution is then mapped in to the solution set of the original problem, ideally arriving at near-optimum solution. For the multiuser detection problem, a relaxation corresponds to a near-optimum multiuser detector. [6]

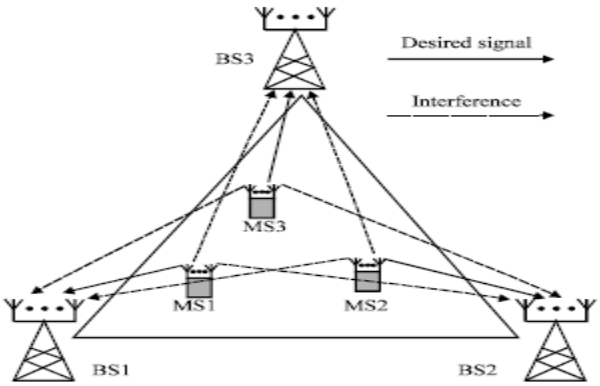

Figure . Interference Cancellation for Cellular Systems

V. MULTIUSER DETECTIONS

By using multiuser detection techniques DS-CDMA detection can be improve. In multiuser detection code and timing as well amplitude and phase information of multiple users are jointly used for better detection of each individual user. Most of the proposed methods have been classified in one of two categories: Linear Multiuser detector and Subtractive Interference Cancellation detectors. In linear multiuser detection, linear mapping is applied to the soft output of the conventional detector to produce a new set of outputs. Which hopefully provide better performances. In subtractive interference cancellation detection estimates of the interference are generated and subtracted out.

VI. THE CONCEPT OF MMUD

By the reference of http://www.researchgate.net/post/ the concept of MMUD can be explain as, In Mobile multi-user detection (MMUD) a matched filter is basic circuit for all MUD although there are standard detection techniques of BPSK, QPSK, etc. in fact. The improvisation in MUD is that it get rid of the effect of other signals that are considered as simply interference or basically noise. Assume that we have only one signal received at the base station, this signal can be detected by a matched filter. Due to added thermal noise one signal errors in reception can be occurs. As we know thermal noise cannot be avoided. Now if there is another signal received, then composite received signal is consist of first signal, the second signal and the thermal noise. Now detecting the first signal can still be done using the matched filter but with more errors because it has thermal noise and second noise is an additional noise i.e. interference.

For optimized error free reception, we may detect the second one first, which will be an estimation of second signal with possible errors, subtract it from the composite signal so that we end up roughly with one signal plus the thermal noise. Now apply detection as before to get the first signal with less error roughly same as if it is received alone with thermal noise only.

This process of successive detection, subtraction etc. needs digital signal processing. This processing can be more adaptively refined to improvise reception again, for example, we can use signal 1 which is obtained last with less errors, subtract it from composite signal and detect signal 2 again to get improved version of it. If we have more signals, the process will become more complicated as it has to do more subtraction and detections. The processing in MMUD need not be a successive detect and subtract process (i.e. Successive Interference Canceller – SIC) and there are algorithm of MMUD in which the optimized signals can be detected in few stages i.e. All the signals can be detected together in one time.[4]

The detected signals are considered as estimated signals, if one signal is to be detected, the remaining N-1 estimated signals can be used to refine the estimate of this particular one (subtract the N-1 and detect again). The minimum square error is used in such processing which called Parallel Interference Canceller – PIC. MUD can be optimum detection in which the detection results in zero errors in the absence of thermal noise or sub-optimum, which cannot guarantee zero errors even in the absence of thermal noise. Of course the suboptimum MMUD have less complex processing.

6.1 Features of MUD

1. It has the capability to reject the interference created by the narrow band

2. Capable to achieve diversity in frequency
3. It tremendously reduces the complexity and it increases the spectral efficiency
4. Robustness to multipath fading
5. The use of modern DSP makes MC-CDMA implementation feasible and attractive
6. MC-CDMA translates the time operations to the frequency domain
7. Effect of ISI and delay spread is mitigated

VII. MUD IN CELLULAR SYSTEMS AND MOBILE NETWORKS

The primary challenge of the network planning is to achieve extended coverage with maximal users it can support with targeted quality of services. Cellular system based on code division multiple access (CDMA) air-interface features flexible access of the users and high spectral efficiency. Third generation (3G) and beyond 3G cellular networks have employed CDMA in the physical layer standardization. Wireless opera-tors have already deployed Wideband-CDMA (WCDMA) and high speed downlink packet access (HSDPA) networks worldwide. However, extensive studies have shown that the cell coverage and capacity are uplink limited. One way to improve the cellular system capacity is to deploy more macro-cell base stations (BSs). However, deploying additional macro-cell BSs are expensive for wireless operators as the infrastructure is the main show stopper. Recent progress in relay communications [1]–[3] has shown that the deployment of fixed relay station (RS) in WCDMA cellular systems can significantly improves the cell coverage and capacity. In relay-assisted cellular net-work, the macro-cell BSs connect to the RSs such that the multi-hop paths are formed to redirect the transmission. RS has the benefits of low cost and flexible design. It also reduces the transmission power in both uplink and downlink for the macro-cell BSs and User Equipments (UEs), which is more critical for the battery life of hand held devices. Another effective solution to enhance the capacity of cellular system is to employ multiuser detection (MUD) techniques [4], [5] to remove the severe intra-cell as well as the inter-cell interferences. Hence, a natural extension for further capacity and coverage enhancement is to apply MUD to relay-assisted cellular networks.

We know that in MIMO system the capacity potential is great. However in practice it has disadvantage of co-channel interference due to sharing of common system resources and frequency reuse among adjacent cells. MIMO system is even ineffective in an interference-limited environment. Therefore, in multi-cell MIMO systems, the application of MUD which can effectively suppress CCI has been widely researched. However, the design of MUD for downlink mobile stations (MSs) is still very difficult to implement, because of the increased complexity of MUD receivers. So, the idea that moving the CCI cancellation to the base stations (BSs) side naturally arises.[2][5]

Base station coordination is also proposed, named as coordinated multi-point processing (COMP) by 3GPP LTE-A. Recently, many researchers have already proved the feasibility of coordinate approaches, including the obtaining of Channel State Information (CSI), information exchanging between coordinated points and so on and studied the capacity of coordination. Studies show that CSI can be obtained at the BSs either by uplink channel estimation or through a feedback channel. Moreover, in current cellular systems, BSs are connected by high-speed wired backbones, so information can been exchanged reliably among them. Furthermore, under strong interference environment, MSs can communicate with several adjacent BSs, such as when soft handoff

takes place in current CDMA systems. Therefore, base station coordination transforms interference into constructive signals, which will bring large performance gain.[2][5]

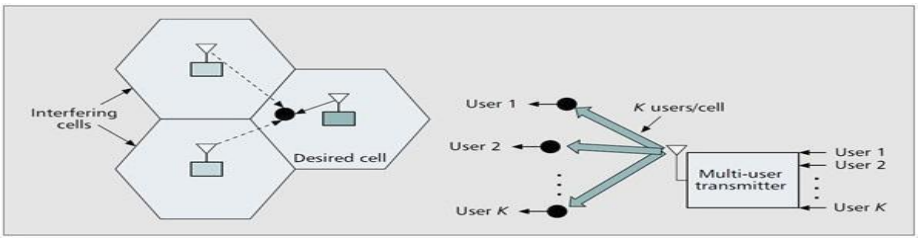

Figure: In the downlink scenario, each receiver only needs to decode its own signal, while suppressing other cell interference from just a few dominant neighboring cells. Because all K user's signals originate at the base station, the link is synchronous and K-1 intra-cell interferes can be orthogonalized at the base station transmitter. Typically, though, some orthogonal signals are lost in the channel.

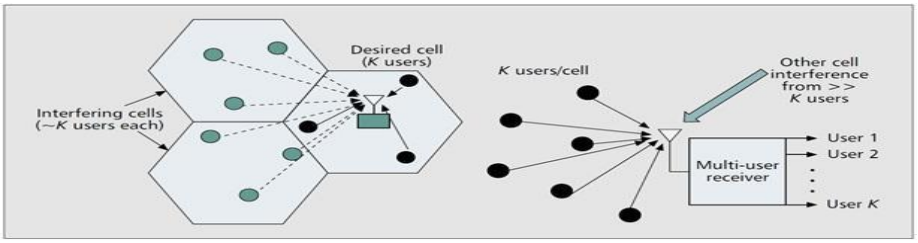

Figure : In the uplink scenario, the base station receiver must decode all K desired users, while suppressing other cell interference from many independent users. Because it is challenging to dynamically synchronize all K desired users, they generally transmit asynchronously with respect to each other, making orthogonal spreading codes unviable.

Figure: Multiuser detection in mobile networks

There are some papers shown uplink MUD using base station coordination approaches. Some of them showed simply assumption of channel matrix. Some focuses on the rate region of joint detection. Most of them do not consider the performance under a realistic system model, including large scale fading. Therefore we focuses on more realistic system model and performance of several base station coordinated MMUD schemes studied based on this model, including ZF COMP, MMSE COMP, ZF-SIC COMP, MMSE-SIC COMP which are studied in multi-cell MIMO systems and their BER performance is compared with compared with corresponding single cell processing with and without interference, simulation shows that these schemes can significantly decrease bit error rate, improve system performance and effectively mitigate co-channel interference.[2][5]

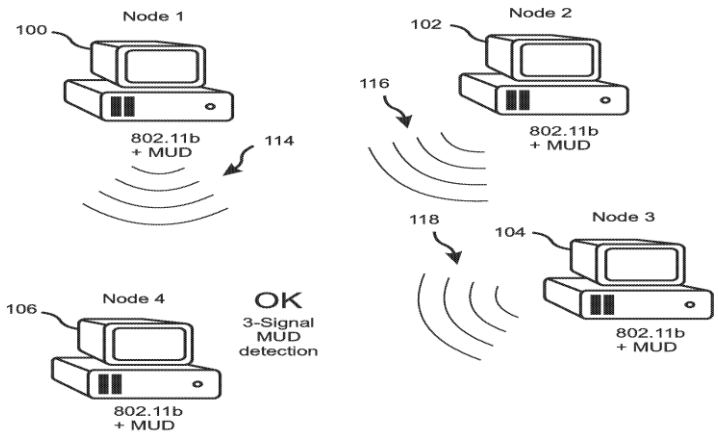

Figure . Multiuser detection enabled ad-hoc wireless communications

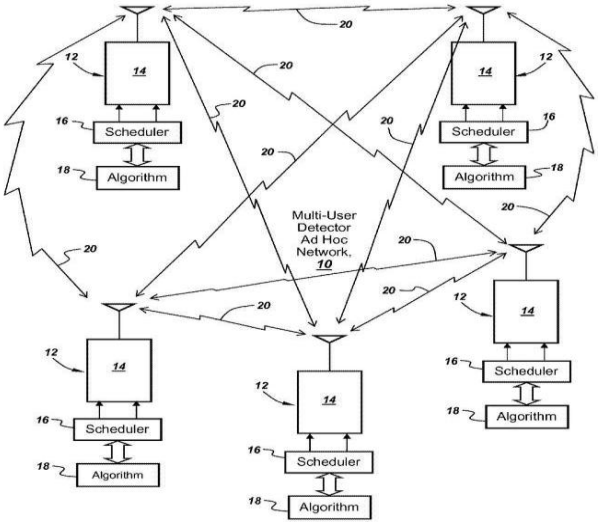

Figure . Multi-User detector in Ad-Hoc Networks

VIII. MUD – LIMITATIONS

1. Existence of other-cell MAI

a. In DS -CDMA, same UL /DL frequencies are used in each cell

b. A signal transmitted from a cell can cause interference to other cells

c. A system without MUD, the total interference (ignore the background noise) is I=IMAI + f IMAI, where IMAI is from the same- cell users, and f IMAI is the from other -cell users, f is the spillover ratio (= other-cell MAI/same-cell MAI)

d. The maximum capacity gain factor is (1+f)/f. (IMAI can be eliminated (ideal system), left f IMAI)

2. Difficulty in implementing MUD on the downlink

a. Due to the limitations of size, weight and price of ME, it is not practice to implemented MUD in mobile.

b. MUD is required to be implemented in B S in any case

c. However improving capacity just in UL does not improve the overall capacity of the system

IX. MUD – POTENTIAL BENEFITS

1. *Significant improvement in Capacity*

a. *The improvement is still important even it is bounded*

b. *Bound can be improved by including surrounding-cell signals in MUD algorithm*

c. *Satellite communication has much smaller spillover ratio*

d. *DS -CDMA is considered to be uplink-limited even MU D does not be implemented in DL.*

2. *More efficient UL spectrum utilization*

a. *UL improvement al lows MS to operate at a lower processing gain*

b. *A smaller bandwidth is required for UL*

c. *Extra band can be used for UL high data rate or for us e by DL*

3. *Reduced precision requirements for Power Control*

a. *MAI reduced, and near-far effect is reduced, So, PC requirement of exactly same power at BS is relieved*

b. *Additional complexity of BS may allow reduced complexity in mobiles*

4. *More efficient power utilization*

a. *Interference reduction in UL can be translated to some reduction of mobile transmitted power*

b. *Same mobile power can be used to extend the size of coverage.*

X. CONCLUSION

In Mobile multiuser detection technique the data observed in non-orthogonal multiplex from multiple users is detected. Mobile multiuser detection deals with demodulation of the mutually interfering digital signal information that occurs in wireless communications, high-speed data transmission, satellite communication, digital TV and magnetic recording etc. The multiuser detection technique is one of the most important developments of recent advances in communications technology. Communication with several users in same time frequency response increase the capacity and speed of the system, so that more users can be accommodate and entertain by system.

XI. ACKNOLEDGEMENT

The auther[1] would like thank Dr. D.J. Pete (HOD of Electronics and telecommunication department) for his tremendous support and help. The auther[1] would also like thank guidance and support received from all the other staff members to complete this paper.

REFERENCES

[1] Shaowei Wang and Hualai Gu "Multiuser Detection with Sparse Spectrum Gaussian Process Regression," IEEE communication letters, Vol. 16, No. 2,pp.164-167 February 2012

[2] Hein Quoc Ngo, et al. "Energy and Spectral Efficiency of Very Large Multiuser MIMO System," IEEE transaction on communication Vol.61, No.4,pp.1436-1449 April 2013

[3] Yao Xie Yonina C. Elder, and Andrea Goldsmith "Reduced-Dimension Multiuser Detection," IEEE transaction on Information Theory Vol.59, No.6, pp..3858-3874 June 2013

[4] Avi Steiner, et al. "The Spectral Effeciency of Successive Cancellation with Linear Multiuser Detection for Randomly Spread CDMA," IEEE transaction on information theory Vol. 58, No. 5,pp.2850-2873 May 2013

[5] Sandra Roger, Daniel Calabuig, "Multiuser Non-Coherent Detection for Downlink MIMO Communication," IEEE Signal Processing Letters, vol. 21, no.10,pp.1225-1229 Octomber 2014.

[6] S. Niranjayan, And Norman C. Beaulieu, "Novel Adoptive Nonlinear Receiver for Multiple Access Communication," IEEE transaction on wireless communication, vol. 12, No.5,pp.2014-2023 May 2013.