3rd International Conference on Science,Technology and Management
India International Center, New Delhi
17 January 2016, www.conferenceworld.in
(ICSTM-16)
978-81-932074-0-6

EXPERIMENTAL INVESTIGATION OF HEAT DISSIPATION FOR CROSS FLOW HEAT EXCHANGER WITH CONVENTIONAL COOLANT BASED HYBRID NANO FLUID ITS VALIDATION WITH CFD

KiranShivade[1], Dattatray Palande[2], Jayant Bhangale[3]

[1]*M.E. Student MCOERC, Pune University, (India)*

[2,3]*Associate Professor, MCOERC, Eklahare, Nashik (India)*

ABSTRACT

The demand for more powerful engines in smaller hood spaces has created a problemof insufficient rates of heat dissipation in cross flow heat exchanger (automotiveradiators). Upwards of 33% of the energy generated by the engine throughcombustion is lost in heat. To minimize the stress on the engine as a result of heatgeneration, automotive radiators must be redesigned to be more compact while stillmaintaining high levels of heat transfer performance. Base fluids (water, ethyleneglycol and glycerol) have been used as conventional coolants in cross flow heatexchanger (automobile radiator) for many years; however, these offered low thermalconductivity, which has prompted researchers to find fluids that offer higher thermalconductivity compared to that of conventional coolants. Nano fluids have beenconsidered as a new-type heat transfer fluid because of their substantial increase inliquid thermal conductivity, liquid viscosity, and heat transfer coefficient.Proposed work concentrates on developing experimental system to investigate the heattransfer enhancement of cross flow heat exchanger with hybrid nano fluids as a coolantand its CFD analysis.

I. INTRODUCTION

Nano fluids are formed by suspending metallic or non-metallic oxide nano particles in traditional heat transfer fluids. These so called nano fluids display good thermal properties compared with fluids conventionally used for heat transfer and fluids containing particles on the micrometer scale. Nano fluids are the new window which was opened recently and it was confirmed by several authors that these working fluid can enhance heat transfer performance. Another application is implementation of nano fluids instead of the conventional fluids in cross flow heat exchanger (radiator).The Cross flow heat exchanger is an important accessory of vehicle engine.

The effectiveness of various types cooling agent in the vehicle cooling system which will influence the operation time of the cross flow heat exchanger (radiator) fan in the light vehicle cooling systems. Cooling system plays important roles to control the temperature of car's engine. One of the important elements in the car cooling system is cooling fluid. The usage of wrong cooling fluid can give negatives impact to the car's engine and shorten engine life. An efficient cooling system can prevent engine from overheating and assists the vehicle

running at its optimal performance. The use of a coolant with a high heat dissipation performance to enhance the cooling efficiency is the easiest method for enhancing the heat dissipation performance.

II. PROBLEM DEFINITION

"Experimental investigation of heat dissipation for cross flow heat exchanger with conventional coolant based hybrid nano fluid its validation with CFD "

Phase-I:-This phase involves the detail study of heat transfer enhancement techniques of cross flow heat exchanger with particular attention towards the passive heat transfer enhancement techniques with nano fluids. Effect of properties related to the nano fluids on heat transfer enhancement will be further analyzed in this phase. Additionally idea behind the mixing of two nanoparticle materials in the base fluid to form the hybrid nano fluids will also be studied.

Phase-II:-On the basis of the concluding remarks from the literature review it is decided to proceed in the same direction towards the investigation of thermal performance the cross flow heat exchanger with hybrid nano fluids. Accordingly the experimental system will be designed and manufactured to investigate the proposed title

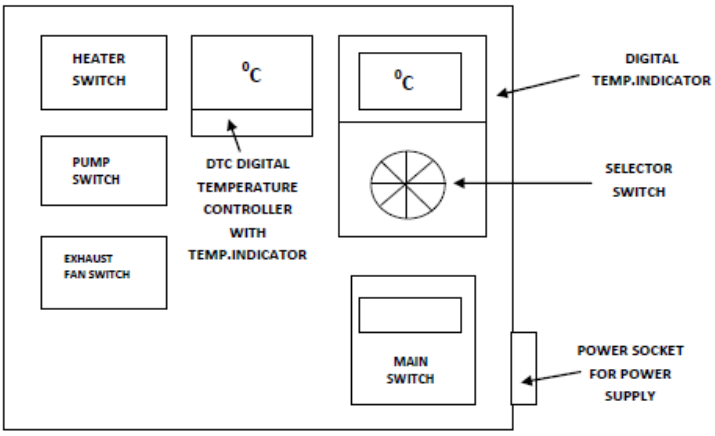

Fig.No.1:-Control panel for proposed experimental system.

Fig. 2 shows the proposed schematic of experimental system and Fig.1 indicates the control panel for experimental system to be developed. The experimental system to be developed includes flow lines, a reservoir tank, heater, a centrifugal pump, flow meter, a forced draft fan, a temperature controller, fiveRTD's with Six channel temperature indicatorto measure the wall temperature and two RTD's with two channel temperature indicator to measure the inlet and outlet fluid temperature in a cross flow heat exchanger.

The test section is a cross flow heatexchanger (an automobile radiator) and forced draft fan. Nanofluid passes through the vertical tubes withstadium-shaped cross section. The fins and the tubes are madewith aluminum.For cooling the liquid, a forced draft fanis to be installed close and face to face to the cross flow heat exchanger. Consequently air andwater have indirect cross flow contact and there will be heat exchangebetween hot water flowing in the tube-side and air across thetube bundle.

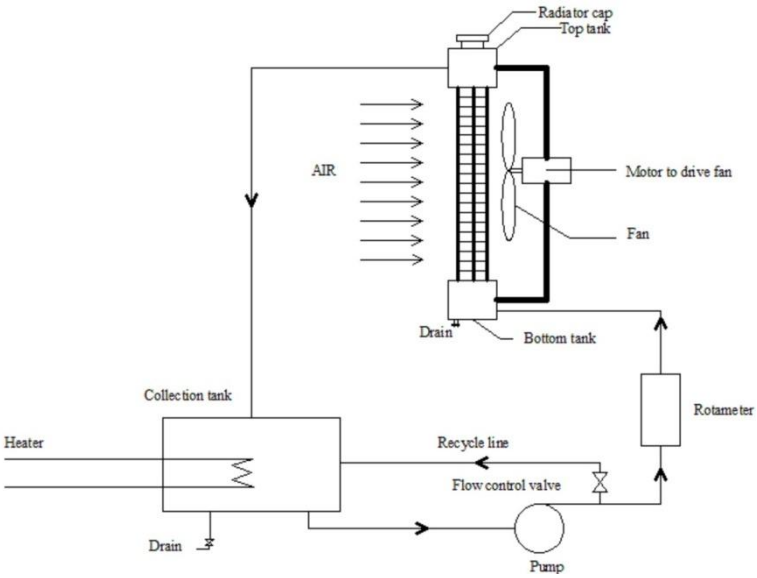

Fig.No.2:- Schematic drawing of the proposed experimental setup.

Phase III:-Additionally to evaluate the accuracy of the measurements, experimental system is to be tested and validated with distilled water before running the experiments with hybrid nanofluids.

Phase IV:-This phase aims to prepare the hybrid nanofluid of required volume concentration with conventional coolant as mentioned. The volume of nanoparticles to be added in the decided quantity ofbase fluid will be decided on the basis of volume concentration. The characterization of Nano fluid will also be done in this phase only.

Hybrid Nano fluid preparation:-Hybrid Nanofluid is to be prepared with following specification

Nanofluid Number	Nanoparticles material	Base fluid	Nanoparticles size	Variation in concentration of Hybrid Nano fluid by volume fraction %
I	$ZnO + Fe_2O_3$	Manufacturer recommended coolant (Green colour)	60/60 nm	0.5
II	$ZnO + Fe_2O_3$			1.0
III	$ZnO + Fe_2O_3$			1.5

Phase V:-By using the hybrid Nano fluid prepared in the above phase, experimentation will be carried out on proposed system with variation in inlet temperature, flow rate and volume concentration of Nano fluid. The corresponding observations will be noted in the respective conditions which will be further utilized to draw conclusions.

Phase VI:-In this phase theeffect of the parameters on thermal performance of the cross flow heat exchanger will be represented graphically to see the variation and come out with some results.

III. OBJECTIVE

1) To find enhancement in heat transfer coefficient with hybrid nano fluids compared with water with variation in hybrid nano fluids concentration, hybrid nano fluids inlet temperature, hybrid nano fluids volumetric flow rate.
2) CFD analysis of the cross flow heat exchanger with water and hybrid nano fluids as coolant and its comparison with experimental results.

IV. SCOPE

In Future, the next steps in the nano fluidsresearchare to concentrate on the heat transfer enhancement and its physical mechanisms, taking into consideration such items as the optimum particle size and shape, particle volume concentration, fluid additives, particle coating and base fluid. Better characterization of nano fluids is also important for developing engineering designs based on the work of multiple research groups, and fundamental theory to guide this effort should be improved. Important features for commercialization must be addressed, including particle settling, particle agglomeration, surface erosion, and large scale nano fluids production at acceptable cost. Nano fluids offer challenges related to production, properties, heat transfer, and applications.

There appears to be hardly any research in the use of nano fluids as refrigerants. Nanoparticle refrigerant dispersions in two-phase heat transfer applications can be studied to explore the possibility of improving the heat transfer characteristics of condensers and evaporators used in refrigeration and air conditioning appliances. It is necessary to study the development of correlations of friction factor and heat transfer through tubes with nano fluids. Therefore, further studies are needed to develop a generalised hydrodynamic and heat transfer characteristic correlation for nano fluids in a tube. Additionally, a comparison among tube shapes for use in a car radiator can be performed experimentally and numerically. The more research in nano fluids which will define their future in the field of heat transfer is expected to grow at a faster pace in the coming future.

In this section we highlight some future directions in each of these challenging areas.

1. Development of theoretical equations for thermo physical properties of nano fluids is the grey area to be explored.

2. The effect of nanoparticles size on heat transfer and friction characteristics of nano fluids can be taken up for investigation.

3. Study on heat transfer investigation by changing the relative proportion in the base Mehta et al., International Journal of Advanced Engineering Technology E-ISSN 0976-3945IJAET/Vol.III/ Issue IV/Oct.-Dec., 2012/49-54 fluid constituents can be taken up as futurework.

V. METHODOLOGY

The focus of this study is investigation of heat dissipation for cross flow heat exchanger with conventional coolant based hybrid nano fluid. For the theoretical methodology to developed a test set up for experiment. For experiment performance test will conducted by usinghybrid nanomaterials material as a coolant on heat Exchanger(Radiator of car) Get the reading of water by providing instruments for monitoring various parameters like thermal conductivity moderately. The overall heat transfer coefficient temperature of the nano fluids. The overall heat transfer coefficient

Volumetric flow rate of the nano fluidssignificantly, analysis of result using CFD obtain on basis of comparison of different types of nano material.

REFERENCES

[1] S. Choi, Nano fluids for improved efficiency in cooling systems, in: Heavy Vehicle Systems Review, Argonne National Laboratory, April 18-20, 2006.

[2] K.Y. Leong, R. Saidur, S.N. Kazi, A.H. Mamun, Performance investigation of an automotive car radiator operated with nano fluids-based coolants (nano fluids as a coolant in a radiator), Appl. Therm. Eng. 30 (2010) 2685- 2692.

[3] R.S. Vajjha, D.K. Das, P.K. Namburu, Numerical study of fluid dynamic and heat transfer performance of Al2O3 and CuOnano fluids in the flat tubes of a radiator, Int. J. Heat Fluid Flow 31 (4) (2010) 613-621.

[4] M.G. Khan, A. Fartaj, D.S.K. Ting, An experimental characterization of cross flow cooling of air via an in-line elliptical tube array, Int. J. Heat Fluid Flow 25 (2004) 636- 648.

[5] S.M. Peyghambarzadeh, S.H. Hashemabadi, M. SeifiJamnani, S.M. Hoseini, Improving the cooling performance of automobile radiator with Al2O3/water Nano fluids, Applied Thermal Engineering 31 (2011) 1833-1838.

[6] S.M. Peyghambarzadeh, S.H. Hashemabadi , M. Naraki , Y. Vermahmoudi , Experimental study of overall heat transfer coefficient in the application of dilute nano fluids in the car radiator, International Journal of Applied thermal engineering 52 (2013) 8-16.