ICT Globalization & Automation-2018
IIMT College of Engineering, Greater Noida ICTGA-2018
12th -13th April 2018 www.conferenceworld.in ISBN: 978-93-87793-20-2

AN ADVANCE EVM BASED ON SMS

[1]Prince Mittal , [2]Md Hatif Raza Khan, [3]Ankita Singh, [4]Taslima Ahmed

[1,2,3] Undergraduate students, [4] Associate Professor

Department of Electronics and Communication Engineering

IIMT College of Engineering, Gr.Noida

ABSTRACT

India is world's largest democracy. Fundamental right to vote or simply voting in elections forms the basis of Indian democracy. In India all earlier elections a voter used to cast his vote by using ballot paper. This is a long, time-consuming process and very much prone to errors. This situation continued till election scene was completely changed by electronic voting machine. No more ballot paper, ballot boxes, stamping, etc. all this condensed into a simple box called ballot unit of the electronic voting machine. SMS based voting machine is capable of saving considerable printing stationery and transport of large volumes of electoral material. It is easy to transport, store, and maintain. It completely rules out the chance of invalid votes. Its use results in reduction of polling time, resulting in fewer problems in electoral preparations, law and order, candidates' expenditure, etc. and easy and accurate counting without any mischief at the counting centre.

I INTRODUCTION

The aim of our project is to design & develop a mobile based voting machine. In this project user can dial the specific number from any land line or mobile phone to cast his vote. Once the user is connected to the voting machine he can enter his password & choice of vote. If he has entered a valid choice & password his vote will be caste with two short duration beeps. For invalid password/choice long beep will be generated. User is allotted 15 seconds to enter his password & choice. A reset button is provided for resetting the system. A total key is provided to display the result.

We have also used non-volatile memory for storing all data. EEPROM will preserve all information in case of power failure.

II DESCRIPTION

The AT89S51 is a low-power, high-performance CMOS 8-bit microcontroller with 4K bytes of in-system programmable Flash memory. The device is manufactured using Atmel high density non-volatile memory technology and is compatible with the industry- standard 80C51 instruction set and pin out. The on-chip Flash allows the program memory to be reprogrammed in-system or by a conventional non-volatile memory programmer. By combining a versatile 8-bit CPU with in-system programmable Flash on a monolithic chip, the Atmel AT89S51 is a powerful microcontroller which provides a highly-flexible and cost effective solution to many embedded control applications.

The AT89S51 provides the following standard features: 4K bytes of Flash, 128 bytes of RAM, 32 I/O lines, Watchdog timer, two data pointers, two 16-bit timer/counters, a five vector two-level interrupt architecture, a full duplex serial port, on-chip oscillator, and clock circuitry. In addition, the AT89S51 is designed with static logic for operation down to zero frequency and supports two software selectable power saving modes. The Idle Mode stops the CPU while allowing the RAM, timer/counters, serial port, and interrupt system to continue functioning. The Power-down mode saves the RAM contents but freezes the oscillator, disabling all other chip functions until the next external interrupt or hardware reset.

III

Block Diagram

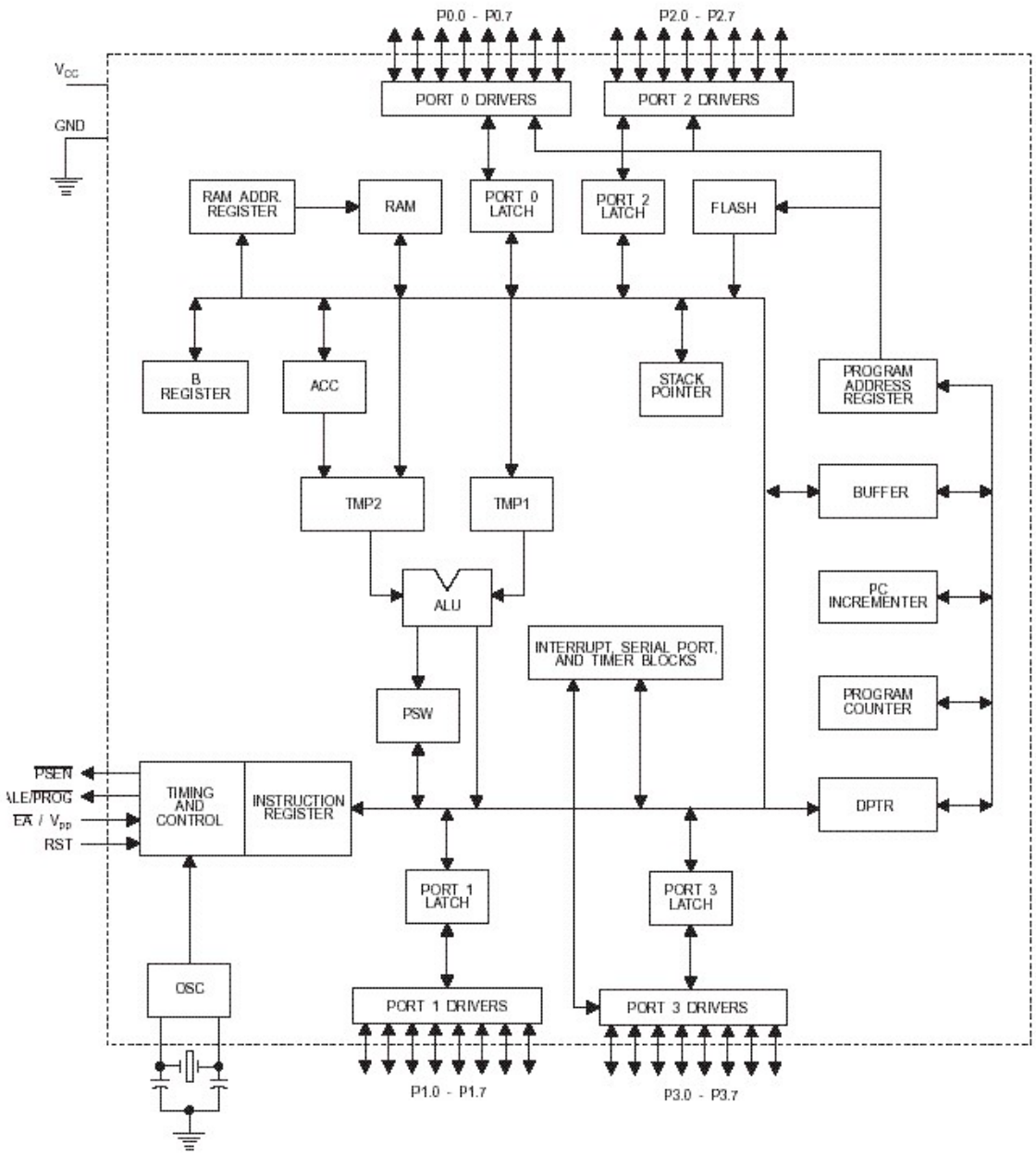

Figure No.1: Block Diagram of Microcontroller

IV POWER SUPPLY

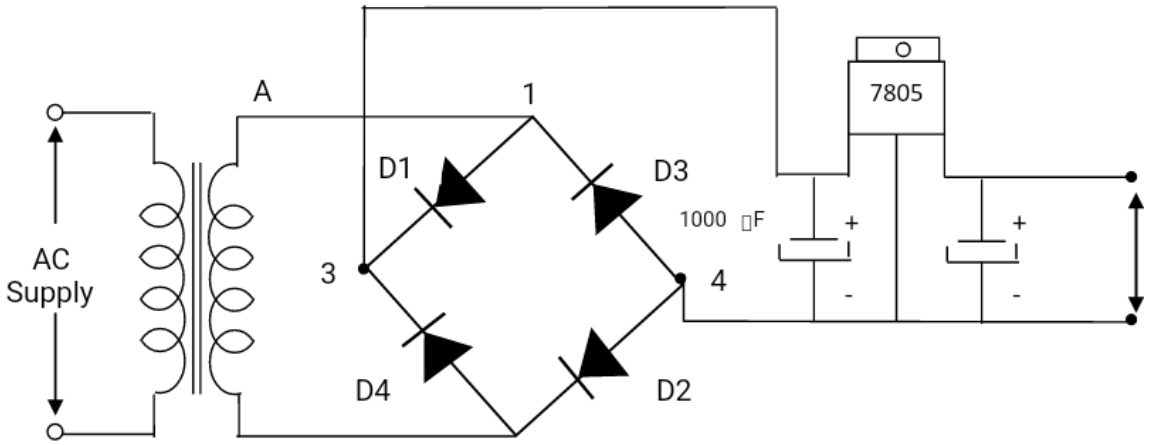

Figure No. 1.5: Power Supply

V BRIDGE RECTIFIER

Bridge rectifier circuit consists of four diodes arranged in the form of a bridge as shown in figure.

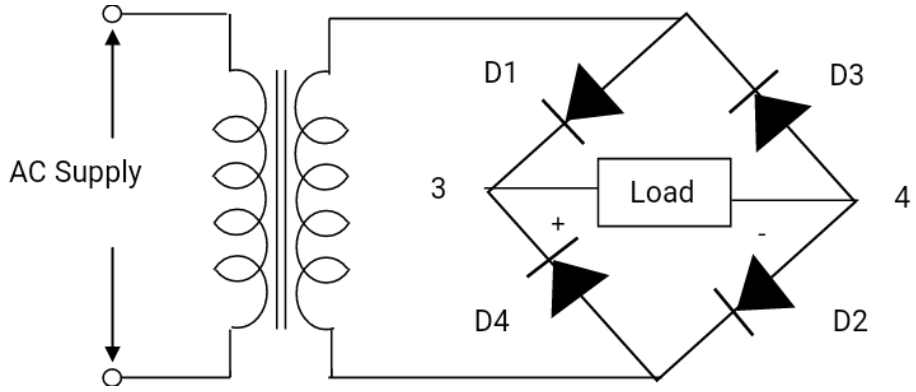

Figure No. 1.6: Bridge Rectifier

VI CONCULSION & FUTURE SCOPE

[1.] Number of candidates could be increased by using other microcontroller.

[2.] It could be interfaced with printer to get the hard copy of the result almost instantly from the machine itself.

[3.] It could also be interfaced with the personal computer and result could be stored in the central server and its backup could be taken on the other backend servers.

[4.] Again, once the result is on the server it could be relayed on the network to various offices of the election conducting authority. Thus our project could make the result available any corner of the world in a matter of seconds

VII AREA OF APPLICATIONS

[1.] Fast track voting which could be used in small scale elections, like resident welfare association, "panchayat" level election and other society level elections.

[2.] It could also be used to conduct opinion polls during annual share holders meeting.

[3.] It could also be used to conduct general assembly elections where number of candidates are less than or equal to eight in the current situation.

[4.] It is used in various TV serials as for public opinion.

REFRENCES

1 C. H. Yang, Network Security: Theory and Practice, Key Hold Information Inc., Taipei, Taiwan, 2006 (in Chinese).

2 H . Mohammed Sidiqi volume . 3, pp: (205-208), at 2015; E- voting system using AVR GSM (global system for mobile communication)

3 W. Began (3.1) SIM300 GSM module in 1998 by European telecommunication.

4 R. Mercuri, "A Better Ballot Box?" IEEE Spectrum, Vol.39, No.10, 2002, pp.46-50