4th International Conference on Emerging Trends in Engineering, Technology, Science and Management
Institution of Electronics and Telecommunication Engineers, IETE Janakpuri, New Delhi, India (ICETETSM-17)
16th July 2017, www.conferenceworld.in ISBN: 978-93-86171-54-2

Design and Implementation of Advanced Hand Gesture Controller and Vocalizer

Mrs. Manjula G Hegde[1], Yukti Behal[2] , Sangeetha G.S[3]

[1,2,3]*Electronics and Communication Department, Shri Pillappa College of Engineering, VTU, (India)*

ABSTRACT

A gesture is a particular action or position of the hand, arm, body, head/eye, face that demonstrates the idea, outlook and sentiment of a person. Vocalization of a gesture, is in concern with speech production, the activity by which spoken sounds are made. When merged with distinct advanced user interface technologies like voice commands, gesture can produce richer user experience that aims to recognize the human "language", thereby feeling the next wave of electronic innovation. Using image processing technology, there is less chance of data misplacement when compared to the use of sensors for the same system. This paper directs to brief the practical extension of a camera for performing the service of gesture controller and vocalizer.

Keywords: Controller, Gesture, Image processing, Recognition, Vocalizer

I.INTRODUCTION

The aircraft host and hostess use gestures to explain the safety guide for the passengers before the aircraft takes off, since most of the passenger's are unable to understand their language especially for aged or hear-impaired passengers. Gesture language is a way by which the individuals who are hearing impaired or voiceless can converse comfortably. This is used to establish communication between human and machines as well. Additional dominating element of a gesture is that it can be collaborated with a Human Computer Interface (HCI).Above combination generates a scope for a human gesture to master any interfaceble device.

Gesture recognition is a concern in computer science and language technology with intention of explaining human gestures by use of mathematical algorithms. Eye tracking , voice recognition , lip movement recognition, facial recognition along with gesture recognition are section of what developer refer as perceptual user interface(PUI). The technology of gesture recognition permits humans to interface with the machine (HMI) and combine spontaneously without any machine devices.Recognition can be controlled with approach of computer vision and image processing. A solution provided in this paper that can be applied for deaf / dumb and physically challenged people in our society.

II. METHODOLOGY

The implemented block diagram of hand gesture vocalizer system is as shown below, consisting of six blocks.The hand gesture made by the person in front of the camera is captured in form of a image.

This image is fed to the Raspberry Pi-3 Model B board which is operated on 5V, 2A power supply. Depending on the gesture which is recognized from the image the gesture is converted into a meaningful voice.The

advantage of using Raspberry Pi-3 Model B is the it is a System on chip(SOC) , acts as a entire minicomputer rather than using only a microcontroller.

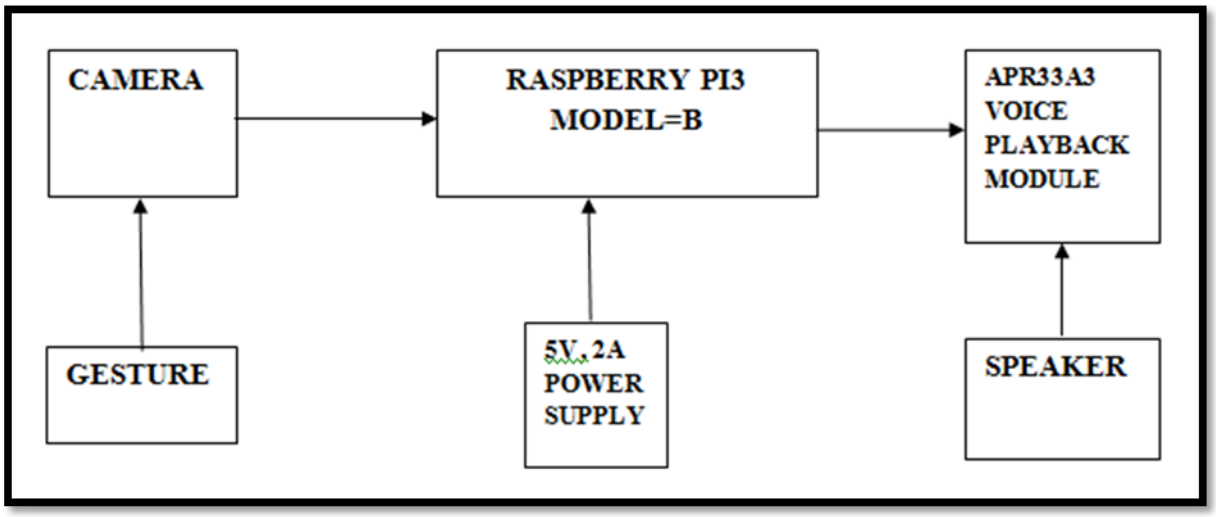

Fig 1.1 Block diagram of Hand Gesture Vocalizer System

The general block diagram of a advanced hand controller consists of majorly six blocks. The microcontroller is majorly used for providing an interface between the L293D motor driver kit and an image. Zigbee transmitter and Zigbee receiver are wireless modules providing the same advantage to the motor controller. Gesture being shown in front of the camera is captured in the form of an image , this is fed as an input to the Arduino Uno which further makes the motor to be driven in desired direction. Arduino C programming language is being used to recognize the image of the gesture. Both Zigbee modules provides wireless transmission and the motor moves with the same interpretation.

The controller operation is performed by L293D motor driver kit whereas the vocalizer function is taking place with APR33A3 voice playback module .There are five directions in which motor can be driven to control a wheel chair i.e. forward, backward, left, right and stop.

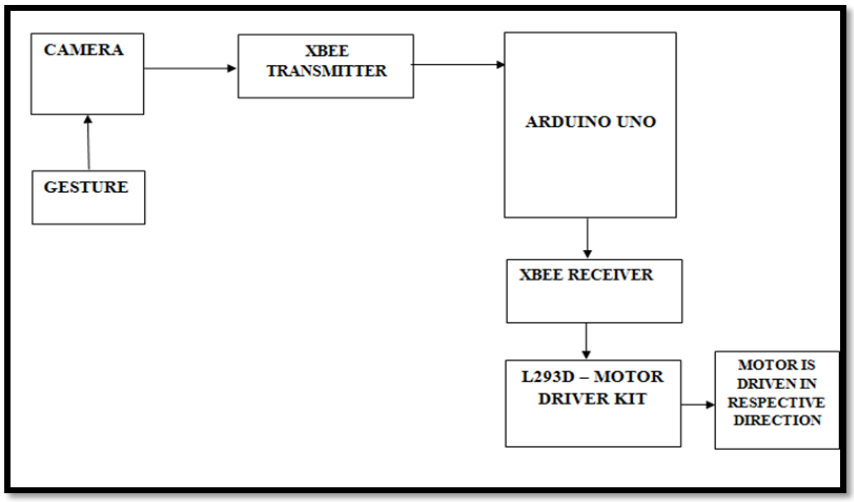

Fig 1.2 Block diagram of Hand Gesture Controller System

III. TRUTH TABLE FOR MOTOR OPERATION

DIRECTION	MOTOR 1		MOTOR2	
	5V	0V	5V	0V
FORWARD	1	0	1	0
BACKWARD	0	1	0	1
RIGHT	0	0	1	0
LEFT	1	0	0	0
STOP	0	0	0	0

Table 1 Truth Table for Motor Operation of the Controller

IV. ANALYSIS

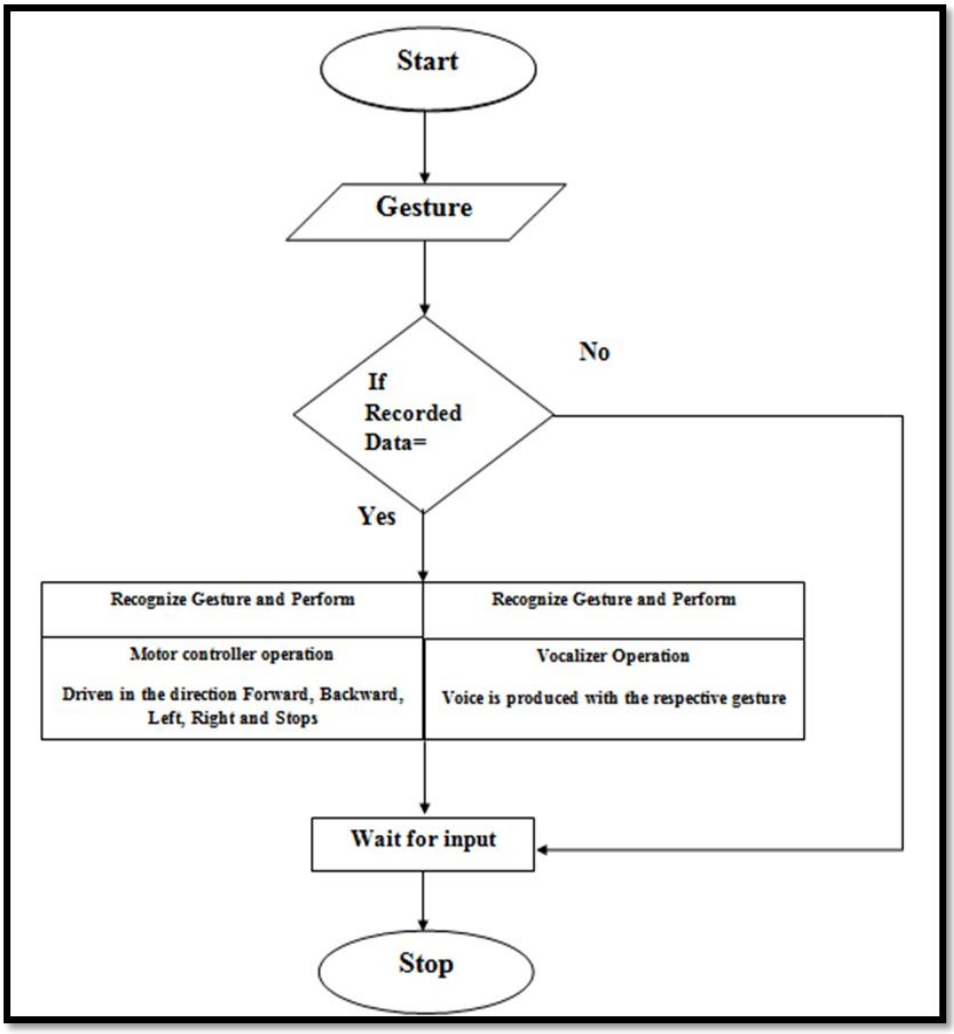

Fig 1.3 Controller Operation and Recognition Operation

The input to the system is a gesture captured by an 8MP webcam as a image. The next is to determine whether the provided input matches the images pre-fed in the processor. If gesture is matching the image already fed in the system it is forwarded to perform the remaining operation else wait for the next input. This loop repeats until a gesture is recognized which is matching the one present in the system .Once the gesture is recognized as its input, it either is made to perform controller or vocalizer operation separately.

Advantages such as python supports user-friendly data structures and is a interpreter language .This approach is better than the use of flex sensors .Single equipment can be used multiple uses. With the extension of hardware it can be successfully supportive towards numerous applications.

V. IMPLEMENTATION

The L293 and L293D devices are quadruple high current half-H drivers. The L293 is designed to provide bidirectional drive currents up to 1A at voltage of 4.5 to36V. The L293D is designed to provide bidirectional drive currents up to 600mA at voltages from 4.5 to 36V. A single unit of L293D can control two motors and hence for controlling the direction of four motors we use two L293D motor drive kits. Complete experimental set up is as shown in the figure below. The entire coding is done in python. The complete experimental procedure is explained as below.

At first Raspberry pi-3 model B board is set up. Connections with aPR33A3 voice play back module are made for the vocalization purpose. Power up the circuit by 12 and 5 volts using 7805 and 7812 ics. Now feed the gesture to the system , and the gesture is recognized, analyzed and processed converted in to voice by the designed codes and the unit. Now set up the Arduino board and make the connections for the motor drives for four motor movements for different directions. Now make the connections with Zigbee transmitter and receiver, gesture is captured and the motor moves accordingly.

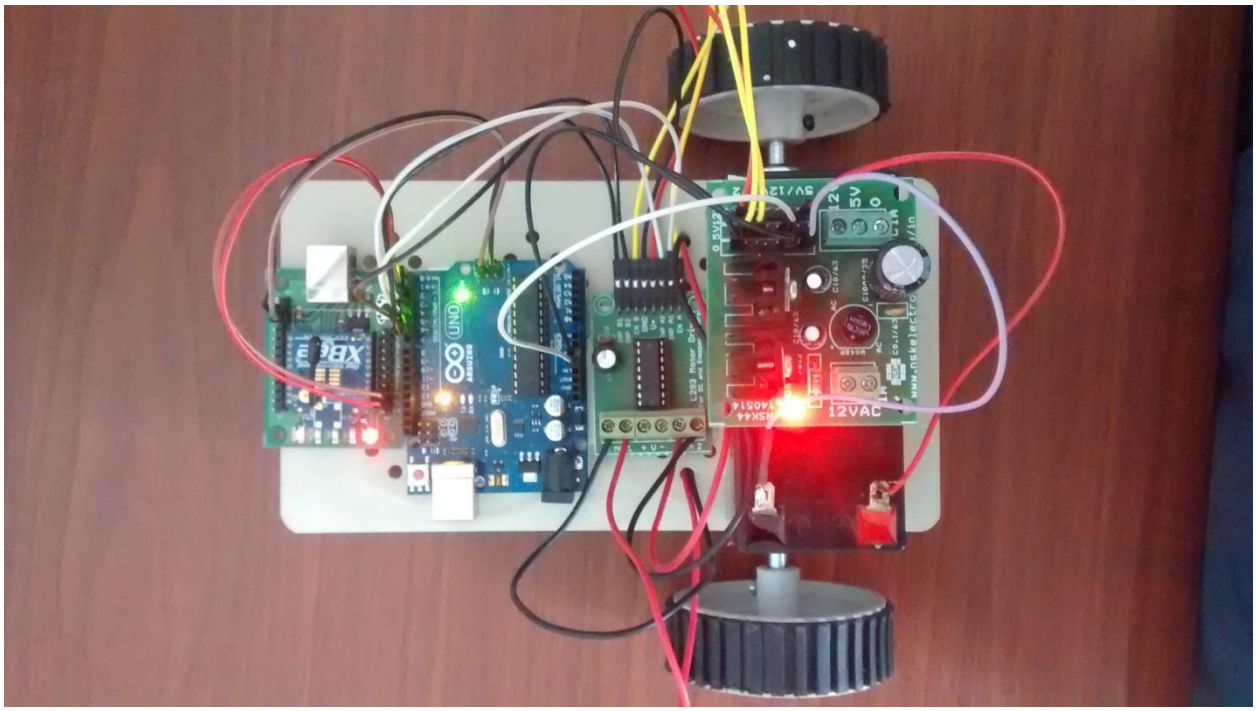

VI. CONCLUSION

The project- "Advanced Hand Gesture Controller and Vocalizer" provides a combined solution for the people who are hearing impaired and physically challenged in our society.If further enhanced, this project can bring a revolution in the medical and other industries. As a future work alternative computer interface can be done. It can be enhanced to control giant machinery vehicles with the movement of hand.

REFERENCES

[1] Image Processing Algorithms for Gesture Recognition using MATLAB; 2014 IEEEInternational Conference on Advanced Communication Control and Computing Technologies (ICACCCT)

[2] Gestures based Wireless Robotic Control using Image Processing; 2015 5th NirmaUniversity International Conference on Engineering (NUiCONE)

[3] Hand Gesture Recognition System Using Image Processing; International Conference on, Electronics, and Optimization Techniques (ICEEOT) – 2016

[4] Real Time Hand Gesture Recognition for Human Computer Interaction; 2016 IEEE 6th International Conference on Advanced Computing

[5] Wireless Hand Gesture Controlled Robot Using XbeeModule;Satellite Conference ICSTSD 2016 International Conference on Science and Technology for Sustainable Development, Kuala Lumpur, MALAYSIA, May 24-26, 2016. "ET155"