International Conference on Recent Innovations in Engineering, Applied Sciences and Management
(IETE) Institution of Electronics and Telecommunication Engineers, New Delhi, India
10th September 2017, www.conferenceworld.in
(EAM-17)
ISBN: 978-93-86171-64-1

Assessing the outcomes of mentoring through employees' prospective

Poonam Sharma[1], Asha Rani [2]

[1,2]*Research scholar, PG department of commerce, university of Jammu, India*

ABSTRACT

There are different beneficiaries in mentoring relationships i.e., the mentor, the protégé, and the organisation. All these entities stand to gain from mentoring relationships. Therefore the aim of the present study is to assess the outcomes of mentoring through employees prospective. Present study focuses on two outcome variables viz. career development and personal learning of the employees. 435 bank employees have been contacted for data collection. Reliability and validity has been proved with the help of confirmatory-factor analysis. Structural equation modeling has been used for hypotheses testing. Result revealed that employees' career development is enhanced by proper mentoring support. Further personal learning act as an important mechanism, which is influence by mentoring. Although the study significantly contributing the mentoring literature but the data collected is self report in nature and study is limited to banking sector only.

Keyword: Mentoring, Personal Learning, career development, Structural Equation Modeling, Confirmatory-Factor Analysis.

I. INTRODUCTION

There are different beneficiaries in mentoring relationships i.e., the mentor, the protégé, and the organisation. All these entities stand to gain from mentoring relationships. Organisations benefits by improving employee retention, gaining organisational commitment, job satisfaction (Weng et al., 2010; Chew & Wong, 2008; Payne & Huffman, 2005; Raabe & Beehr, 2003), reduced turnover (Payne & Huffman, 2005) enhanced job commitment, job efficiency and job performance (Akarak & Ussahawanitchakit, 2008; Emmerik, 2008). Likewise, mentors benefit through encouraged in role job performance, personal learning, social status, team cohesiveness (Lui et al., 2009; Dawely et al., 2010), emotional exhortation and turnover intention (Wang et al., 2014). Ragins & Cotton (1999) considered promotion rate and compensation as career outcomes for the mentors. Further Ghosh & Reio, (2013) found that career functions are more associated with career success of the mentor, psychosocial functions with organisational commitment and role modelling with job performance. As mentoring relationships are seen as helping relationships, it is easy to assume that the protégé would be the greatest beneficiary. Young & Perrewe (2000) indicated the mentoring and protégés' perceptions of expectations regarding the exchange of role behaviour positively influence important outcomes relevant to the mentoring i.e. relationship, effectiveness and trust. Mentoring also gives positive results for protoges in the form of increased employees satisfaction, perceived career satisfaction (Murphy & Ensher, 2001) ethno-cultural empathy , competence, relatedness, autonomy (Marshall et al., 2015), reduced turnover intention (Park et al., 2016), repatriate adjustment (Wu et al., 2014) behavioural, attitudinal, health-related, relational, motivational,

and career outcomes (Eby et al., 2008). Further Munson & McMillen (2009) study revealed that presence of mentor and duration of relationship is associated with less depression symptoms, less stress and more satisfaction with life among the youth. More mentoring support was related with protégé career clarity over the duration (Wanberg et al., 2006). Therefore the present paper aim is to assess the outcomes of mentoring through employees prospective and the same has been presented diagrammatically in figure 1.

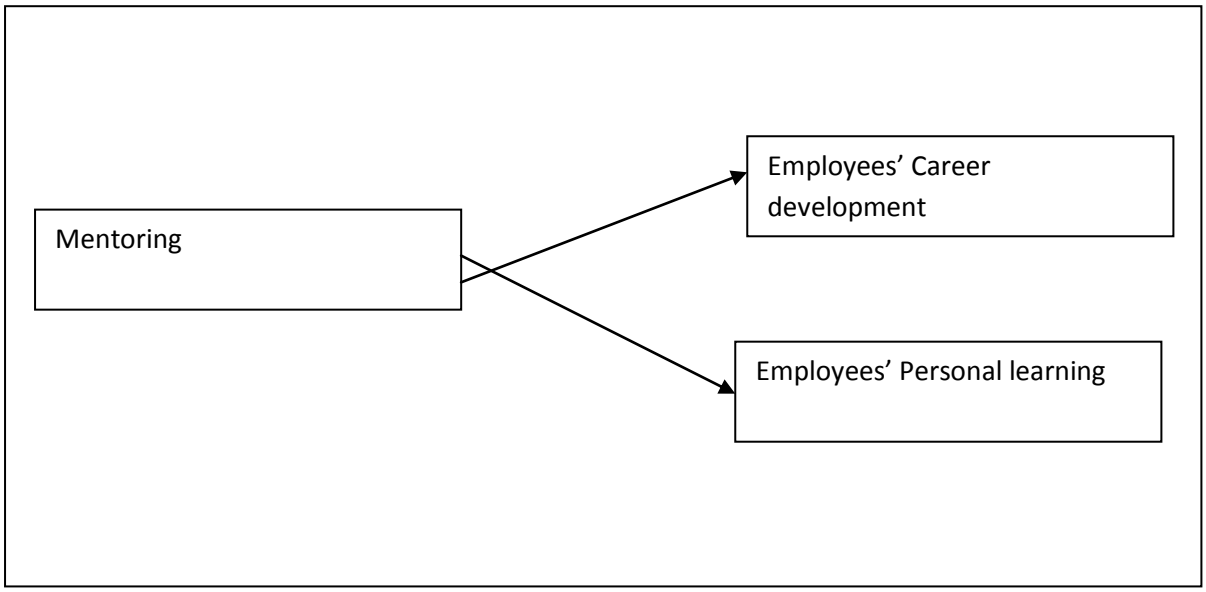

II. HYPOTHESES DEVELOPMENT

Ragins & Scandura (1999) found that mentoring benefit employees through increased prospects of career development. Positive outcomes which have been linked to mentoring include a protégé career attachment (Banhiuk et al., 1990; Hunt &Michael., 1983; Kram, 1983; Neo, 1988; Turan & Dougherty, 1994), early career success (Whitely et al., 1991) career satisfaction and the numbers of promotions received (Whitely & Coestsier, 1993). Henning & Jardim (1977) reached a similar conclusion for women executives. Roche (1979) reported that mentoring was related to higher salaries and total compensation of two-thirds of the most prominent US business executives. More recent studies of mentoring have continued to find that mentoring makes a significant contribution to career enhancement and professional development (Conway, 1995; Dreher & Ash, 1990; Dreher & Cox, 1996; Scandura & Viator, 1994; Scandura, 1992). The experience, knowledge, and resulting coaching by the mentor can be a significant aide in the career development of the protégé. A major focus of the mentoring literature is the benefits of career development for the protégé. It has also been found that those with mentors are faster to receive promotions than those without (Dresher & Ash, 1990). Based on the above discussion the following hypothesis has been framed:-

Hypothesis 1: Mentoring enhances career development of the employees.

In order to create a more formalised mentoring process, a learning culture needs to be developed (Marshall et al., 2015). Mentoring relationship is the vehicle through which individuals can enhance personal learning (Kram, 1996). Mentoring is important for the employee in coping during a major reorganisation in which learning demands get increased (Kram & Hall, 1996; Pan et al., 2011). In addition to coping with change, a mentor provides an opportunity for a protege to receive feedback about ideas, perceptions, and performance (Hudson et al., 2013). Mentors also serve specific functions, such as providing vocational support, psychosocial

support, and role modeling (Kram, 1985). These functions establish a protege's sense of competence, identity, and effectiveness in his or her role in an organisation. Hence, having a mentor is likely to contribute to greater personal learning for mentees.

Hypothesis2: Mentoring enhances personal learning

III. METHODOLOGY

Measure

Mentoring: Scandura & Ragins (1993) 15 items scale has been used to measure mentoring. *Career development:* 8 items self generated by reviewing Rao & Parak (2007) book.

Personal learning: it has been self-generated (8 items) covering two dimensions i.e. relational job learning and personal skill development (Lankau & Scandura, 2002 and Liu et al., 2009).

Pilot survey

A pilot survey has been conducted in which approximately hundred bank employees from Jammu city were contacted on the basis of convenient sampling. The data collected from pilot survey has been analysed by using EFA as some of the scales are self generated. The detail result of EFA are given below

***Mentoring*:** Mentoring consisted of fifteen items. After applying factor analysis four items got deleted and all the other items fulfilled the threshold criteria of anti image value, communality extracted and factor loading (above 0.5) and these eleven items converged under three factors namely psychosocial functions (four items), career functions (five items), and role modeling. These factors accounted for approximately 70 percent of total variations (i.e. psychosocial function account for 27.84% of variance, career function account for 25.32 % of variance and role modeling account for 17.09% of variance). The KMO value (0.751) and BTS (chi-square=564.544, df=55, sig=0.000) gave the required adequacy for applicability of EFA (table). Psychosocial function has emerged as most important factor (VE= 27.84%).

Career development: This scale contained eight items that has been reduced to five after applying factor analysis. These five items converged under two factor namely work related development and future development. The KMO value is .621 and the extracted communalities for all the items are greater than 0.5. This scale has explained 70 percent of total variation out of which first factor has explained 38 percent of variation and second factor has explained 32 percent of variation. The Eigen value is greater than one for both factors.

***Personal learning*:** the application of EFA using varimax rotation on personal learning helped in the identification of two factor viz. Relational job learning (four items) and personal Skill development (three items). The KMO value is measured as 0.861 and BTS assessed as chi-square= 399.423, df= 21 and sig= 0.000, which support the aptness of data for pursuing factor analysis. The total variance extracted and Eigen value of relational job learning is 41.227%, 2.886 and the variance explained by skill development account for 33.579% and Eigen value is 2.351.

IV. RESULTS

Confirmatory Factor Analysis

CFA has been conducted to validate different constructs on the basis of factor that emerged during EFA. Construct-wise explanation is as under

Mentoring: The second order factor model of mentoring has been framed. Application of CFA resulted into deletion of two items due to low SRW value i.e. CF2 and PF1 (Figure 2). After deletion the model yielded a good fit (χ^2/ df= 3.515, CFI=0.941, GFI=0.952, AGFI= 0.914, NFI=0.921, RMR=.068 and RMSEA= 0.80). Further Cronbach's alpha value for all the sub-constructs are within the accepted limit (career function= 0.782, psychological function= 0.792 and role modeling= 0.781). Composite reliability got established (0.987). Convergent validity also got established as AVE and factor loadings are above 0.5 (Table 2). Discriminant validity got established as the squared root of average variance extracted is higher than the correlation between and other scales used in this study (Table 1).

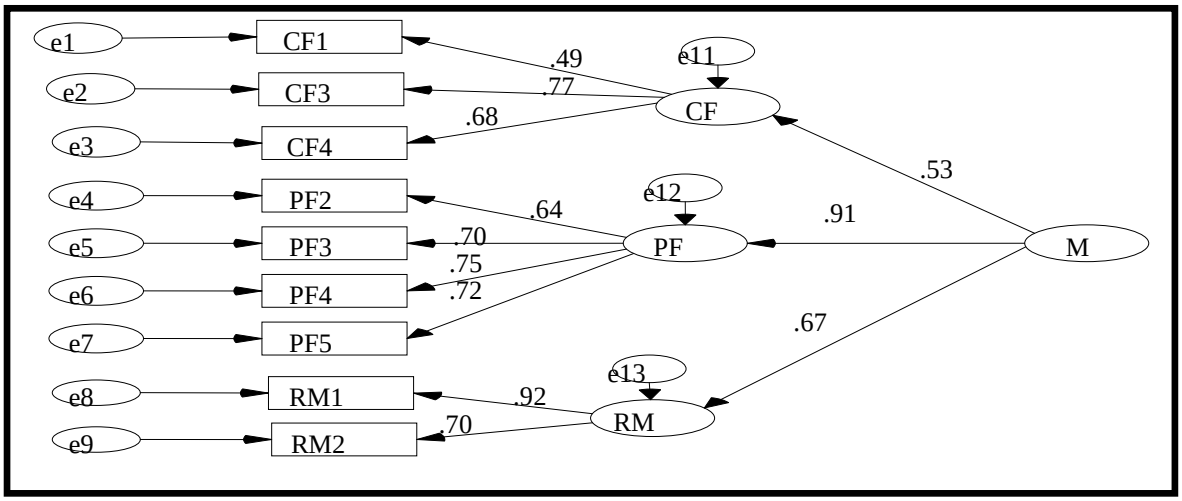

Figure 2. Measurement Model of Mentoring

Key: CF= career function, PF=psychosocial function, RM=role modeling, M=mentoring, e1-e13= error terms of manifest variables, cf1 to cf4= manifest variables of career functions, pf2 to pf5= manifest variables of psychosocial functions, rm1, rm 2= manifest variables of role modeling

Career Development: It is predicted by five items, which are grouped under two factors namely, work related development and future development. The validity predicting measures revealed satisfactory values viz, significant standardised regression estimates (Figure 3). This model indicated satisfactory goodness of fit as all the cutoff values of indices qualify the magic value of .90. The chi-square/df statistic come out to be less than 5 and RMSEA is also nearing zero (0.33). The Cronbach's alpha value for work related development is 0.780 and for future development is 0.750. The Composite reliability is 0.978. The discriminant validity also got established (Table 1). All the standardized estimates are greater than 0.5 and AVE is also greater than 0.5, which proved convergent validity (Table 2).

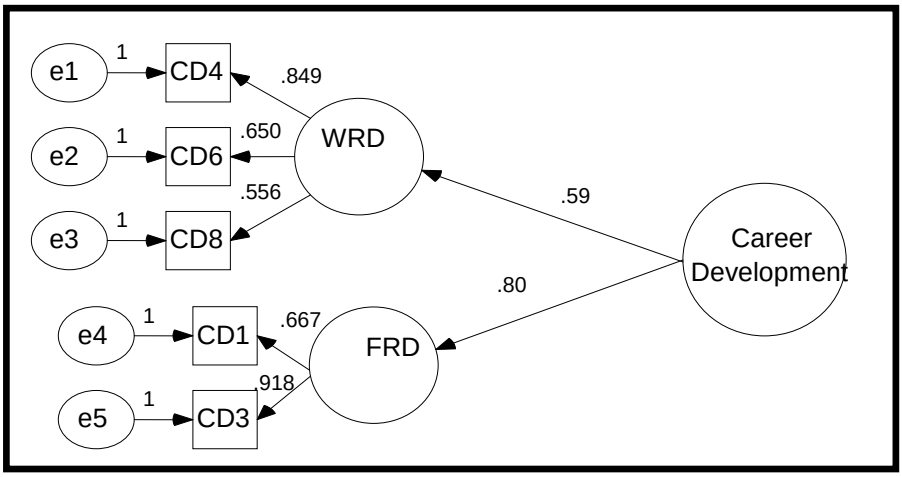

Figure 3: Measurement Model of Career Development

key: cd1-cd8= Manifest Variable of Career Development, WRD= work related development, FRD= future development, e1-57= Error Term of Manifest Variable

Personal learning: EFA resulted into seven items under two factor namely, relational job learning and personal skill development (Figure 4). After applying CFA one of the items got deleted due to low SRW value (pl2). After deletion the model yield perfect model fit indices (χ^2/ df= 2.95, CFI=0.968, GFI= 0.980, AGFI= 0.947, NFI=0.957, TLI= 0.941, RMR= 0.018 and RMSEA = 0.070). One of the items (pl5) namely "frequently asking for feedback about ideas, perception and performance" is reflecting personal learning the most (0.74). Validity and reliability has been checked through cronbach alpha, composite reliability, discriminant validity and convergent validity. Cronbach's alpha value for personal skill development is 0.779 and for relational job learning is 0.748. Composite reliability of this model is 0.966. Convergent validity is also established as AVE and SRW value are above 0.5. Squared root of average variance extracted is higher than the correlation of different scale used in this study, which proves discriminant validity (Table 1)

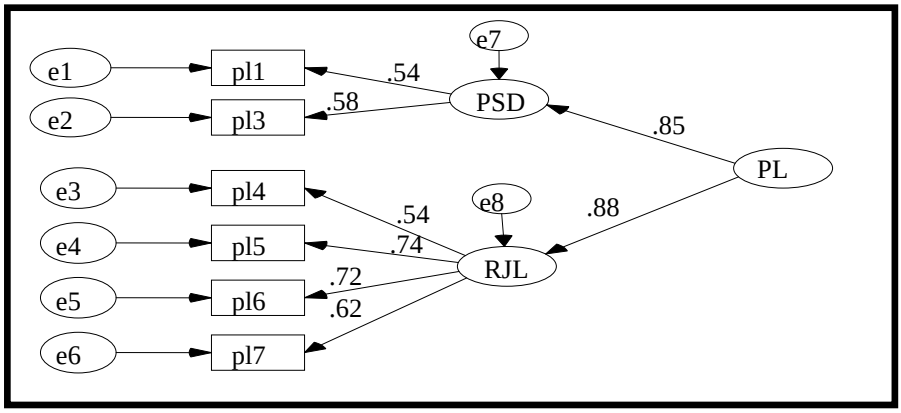

Figure 4 Measurement Model of Personal Learning

Key. PSD=personal skill development, RJL= relational job learning, PL= personal learning, pl1 and pl3= manifest variables of PSD, pl4 to pl7= manifest variables of RJL, e1-e8= error terms of manifest variables

Table 1: **Discriminant Validity and Correlation Analysis**

	Mentoring	Career development	Personal learning
Mentoring	**0.97**		
Career development	.424**	**0.94**	
Personal learning	.220**	.434**	**0.90**

*Note. Values on the diagonal axis represent the square root of average variance extracted. Values below the diagonal axis are correlation **p< 0.01*

Table 2: Reliability and Validity Analysis

Constructs	Mean	Standard deviation	Standardized Regression Weight	Average Variance Extracted	Composite Reliability	Cronbach's alpha
Mentoring	**3.88**	**.786**		**0.95**	**0.98**	
Career function	3.63	.834	0.53			0.782
Psychosocial function	3.96	.773	0.91			0.792
Role modeling	4.05	.752	0.67			0.781
Career development	**3.95**	**.724**		**0.90**	**0.97**	
Work related development	3.82	.790	0.59			0.780
Future related development	4.08	.658	0.80			0.750
Personal learning	**4.22**	**.555**		**0.82**	**0.96**	
Relational Job learning	4.12	.605	0.85			0.779
Skill development	4.32	.505	0.88			0.748

Mentoring →career development

The relationship between mentoring and career development has been assessed through SEM. The model fit indices (χ^2/df=3.194, RMSEA=0.075, RMR=0.060, GFI= 0.922, AGFI= 0.885, NFI=0.879, IFI=0.914, TLI=0.888, CFI=0.913) depicted the model to be fit. The SRW (standard regression weights) value came out to be 0.633 (p<.001), which revealed that mentoring significantly and positively affects career development of the employees (Figure 5).

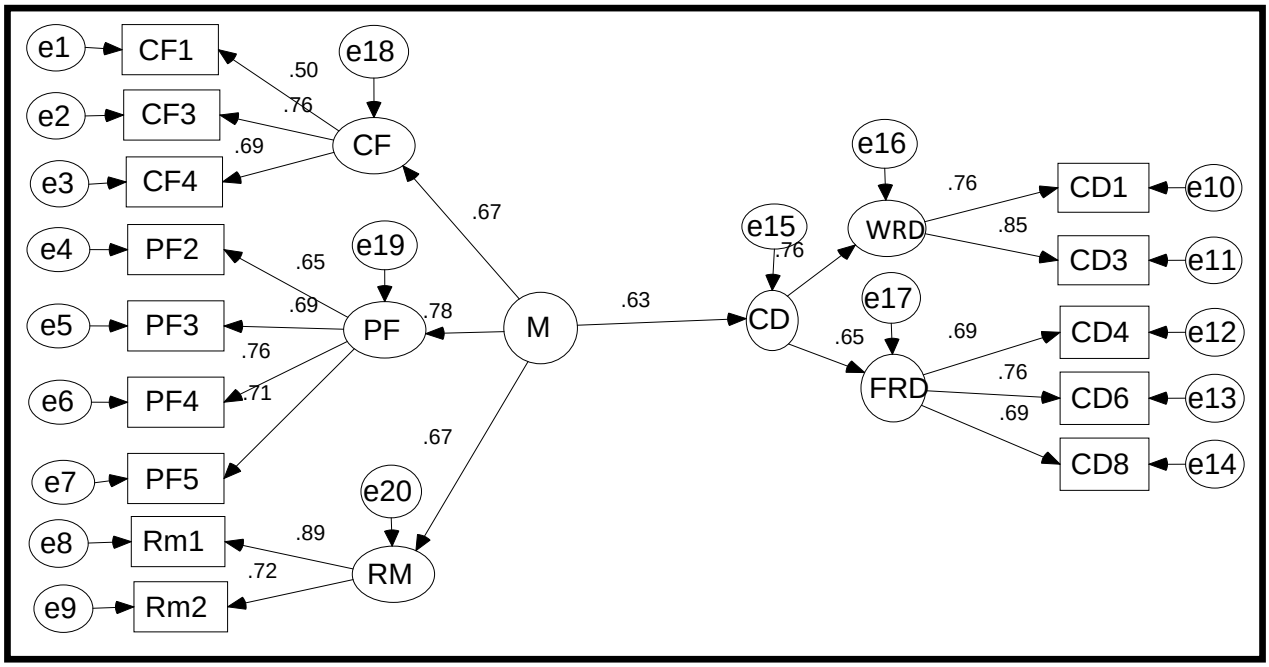

Figure 5: Impact of Mentoring On Career Development

Mentoring →personal learning

The structural path revealed positive impact of mentoring on personal learning (SRW=0.24, P<0.05, Figure 6). The model fit indices show appropriateness of the model (χ^2/df=2.774, RMSEA=0.067, RMR=0.052, GFI= 0.927, AGFI=0.897, NFI=0.867, IFI=0.910, TLI=0.888, CFI=0.909).

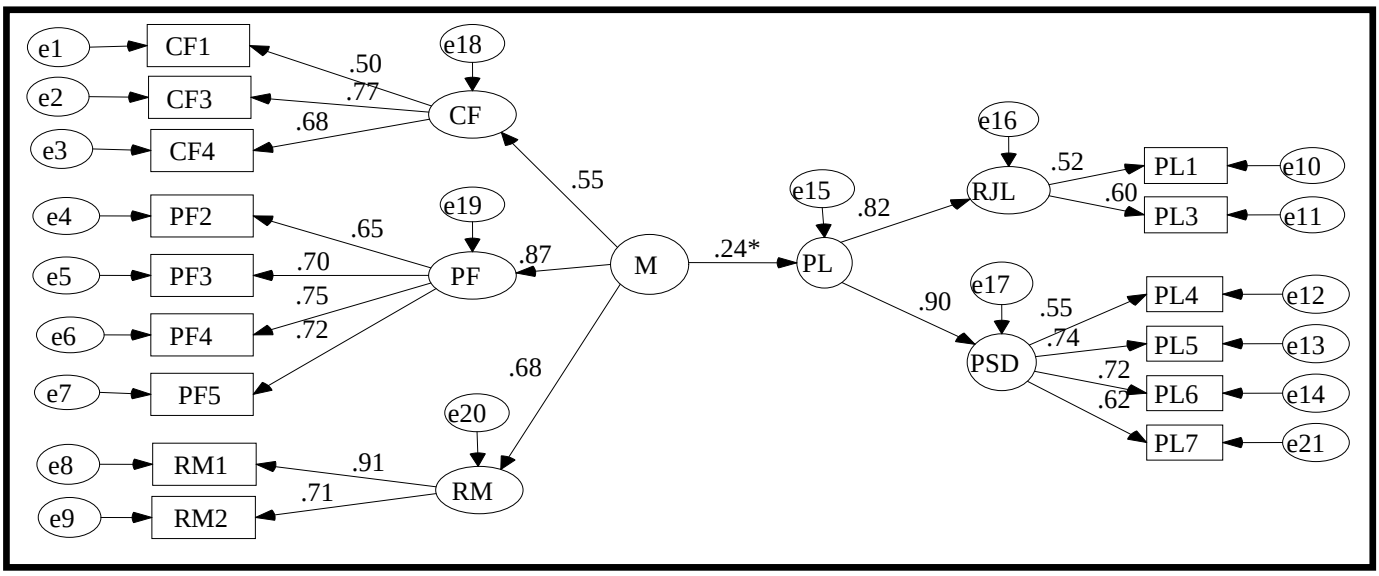

Figure 6: Impact of Mentoring on Personal Learning

V. DISCUSSION

Present paper aim is to evaluate the impact of mentoring on career development and personal learning. During the mentoring process, mentors often assigns challenging and learning tasks to mentees in order to improve the

mentees' knowledge and skills, provide career guidance, support the advancement of job position, help in resolving task-related problems, and further promote their overall growth. This leads to career development and position advancement

Further mentoring positively enhances personal learning. In the present study most of the mentees enhance personal learning through various development and relational activities. Further relational learning helps mentee to learn from group activities, frequent feedbacks about ideas, perceptions, and performance about work. Bank employees learn from interaction with colleagues. Personal skill development helps mentee to develop skill through the tasks that enable him/her to learn new skills. He/she is able to develop new ideas about his/her job performance. Thus personal learning develops a network among employees to collect resources, which is enhanced through mentoring support.

VI. LIMITATION AND FUTURE RESEARCH

All the precautionary efforts were made to ensure the objectivity, reliability, and validity of the study, yet certain limitations were discovered. These limitations are discussed as under: The study is confined to banking sector only. Same can be done for other outer outcomes of mentoring viz., job performance, organizational commitment, relationship quality and self efficacy. Only employees were contacted for data collection. In future data can be collected from multiple respondents i.e. mentors and mentees.

REFERENCES

[1.] Akarak, P., & Ussahawanitchakit, P. (2008). Effects of mentoring on intention to leave in Thai public accounting firms: Mediators of job efficiency, commitment and performance. *Review of Business Research, 8*(2), 37-46.

[2.] Bahniuk, M. H., Dobos, J., & Hill, S. E. (1990). The impact of mentoring, collegial support and information adequacy on career success: A replication. *Journal of Social Behavior and Personality*, 5(4), 431-451.

[3.] Chew, Y. T., & Wong, S. K. (2008). Effect of career mentoring experience and perceived organisational support on employee commitment and intentions to leave: A study among hotel worker in Malaysia. *International Journal of Management*, *25*(4), 692-700.

[4.] Conway, C. (1995). Mentoring managers in organizations**.** *Equal Opportunities International Journal*, 14(3/4), 10-20.

[5.] Dawley, D. D., Andrews, M. C., & Bucklew, N. S. (2010). Enhancing the ties that bind: Mentoring as a moderator. *Career Development International*, *15*(3), 259-278.

[6.] Dreher, G. F., & Ash, R. A. (1990). A comparative study of mentoring among men and women in managerial professional and technical position. *Journal of Applied Psychology*, 75(5), 539-546.

[7.] Dreher, G. F., Cox, J., & Taylor, H. (1996). Race, gender, and opportunity: A study of compensation attainment and the establishment of mentoring relationships. *Journal of Applied Psychology*, 81 (3), 297-308.

[8.] Eby, L. T, Allen, T. D., Evans, S.C., Nag, T., & DuBois, D.L. (2008). Does mentoring matter: A multidisciplinary meta- analysis comparing mentored and non mentored individuals. *Journal of Vocational Behaviour, 72*(2), 254-267.

[9.] Emmerik, I. J. H. (2008). It is not only mentoring the combined influences of individual-level and team-level support on job performance. *Career Development International*, *13*(7), 575-593.

[10.] Ghosh, R., & Reio, T. G. R. (2013). Career benefits associated with mentoring for mentors: A Meta analysis. *Journal of Vocational Behaviour, 83* (1), 106-116.

[11.] Henning, N., & Jardim, A. (1977). *The managerial woman*. New York: Anchor Books.

[12.] Hudson, P., Hudson, S., Gray, B., & Bloxham, R. (2013). Learning about being effective mentors: Professional learning, communities and mentoring. *Procedia-Social and Behavioural Science 93*, 1291-1300. DOI:10.1016/j.sbs pro.2013.10.031.

[13.] Hunt, D. M., & Micheal, C. (1983). Mentorship a career training and development tool. *Academy of Management Review*, 8(3), 475- 485.

[14.] Kram, K. E. (1983). Phases of the mentor relationship. *Administrative science quarterly*, 26(4), 608-625.

[15.] Kram, K. E. (1985). *Mentoring at work: Developmental relationships in organizational life*. Glenview, IL: Scott, Foresman.

[16.] Kram, K. E., & Hall, D. T. (1996). Mentoring in a context of diversity and turbulence. In E. Kossek & S. Lobel (Eds), *Managing diversity: Human resource strategies for transforming the workplace* (pp. 108-136). Cambridge, MA: Blackwell.

[17.] Kram, K.E. (1996). A relational approach to career development. In D. Hall& Associates (Eds.). *The career is dead- long live the career: A relational approach to career* (pp.132-157). San Francisco: Jossey-Bass.

[18.] Lankau, M. J., & Scandura, T. A. (2002). An investigation of personal learning in mentoring relationships: Content, antecedents, and consequences. *Academy of Management Journal*, *45*(3), 779–790.

[19.] Liu, D., Liu, J., Kwan, K. H., & Mao, Y. (2009). What can I gain as a mentor? The effect of mentoring on the job performance and social status of mentors in China. *Journal of Occupational and Organisational Psychology*, *82*(2), 871- 895.

[20.] Marshall, J. H., Lawrence, E. C., Williams, J. L., & Peugh, J. (2015). Mentoring as service learning: The relationship between perceived peer support and outcomes for college women mentors. *Studies in Educational Evaluation. 47*(December), 38-46.

[21.] Munson, M. R., & McMillen, J. C. (2009). Natural mentoring and psychosocial outcomes among older youth transitioning from foster care. *Children and Youth Services Review, 31* (1), 104-111.

[22.] Murphy, E., & Ensher, E. A. (2001). The Role of mentoring support and self-management strategies on reported career outcomes. *Journal of Career Development*, *27*(4), 229-246.

[23.] Noe, R. A. (1988). Women and mentorship: A review and research agenda. *Academy of Management Review*, 13(1), 65-78.

[24.] Pan, W., Sun, L-Y., & Chow, I. H. S. (2011). The impact of supervisory mentoring on personal learning and career outcomes: The dual moderating effect of self-efficacy. *Journal of Vocational Behaviour, 78*(2), 264-273.

[25.] Park, K.H., Newman, A., Zhang, L., Wu, C., & Hooke. A. (2016). Mentoring functions and turnover intention: The mediating role of perceived organisational support. *The International Journal of Human Resource Management, 27*(11), 1173-1191.

[26.] Payne, S., & Huffman, A. (2005). A longitudinal examination of the influence of mentoring on organisational commitment and turnover. *Academy of Management Journal*, *48*(2), 158-168.

[27.] Raabe, B., & Beehr, T. (2003). Formal mentoring versus supervisor and co-worker relationship: Differences in perception and impact. *Journal of Organisational Behaviour*, *24*(2), 271-293.

[28.] Ragins, B. R., & Cotton, J. L. (1999). Mentor functions and outcomes: A comparison of men and women in formal and informal mentoring relationships. *Journal of Applied Psychology*, *84*(4), 529-550.

[29.] Ragins, B.R., & scandura, T.A. (1999). Burden or blessing Expected costs and benefits of being a mentor. *Journal of Organizational Behavior*, 20(4), 493-509.

[30.] Rao, T.V., & Pareek, U. (2007). *Designing and managing human resource systems. Oxford & IBH publishing co. pvt. Ltd.*

[31.] Roche, G. R. (1979). Much do about mentors. *Harvard Business Review*, 57(1), 14-28.

[32.] Scandura, T. A., & Viator, R. E. (1994). Mentoring in public accounting firms : An analysis of mentor-protégé relationship mentorship functions, and protégé turnover intention. *Accounting Organizations and Society*, 19(8), 717-734.

[33.] Scandura, T. A. (1992). Mentorship and career mobility: An empirical investigation. *Journal of organizational Behaviors*, 13(2), 169-174.

[34.] Scandura, T. A., & Ragins, B. R. (1993). The effects of sex and gender role orientation on mentorship in male dominated occupations. *Journal of Vocational Behavior, 43* (3), 251−265.

[35.] Turban, D.B., & Dougherty, T.W. (1994). Role of protégé personality in receipt of mentoring and career success. *Academy of Management Journal*, 37(3), 688-702. Weiss, D. J., Dawis, R. V., England, G. W., & Lofquist, L. H. (1967). Manual for the Minnesota Satisfaction Questionnaire. Minneapolis: University of Minnesota.

[36.] Wanberg, C. R., Kammeger-Mueller, J., & Marchese, M. (2006). Mentor & protégé predictors and outcomes of mentoring in a formal mentoring program. *Journal of Vocational Behaviour, 69* (3), 410-423.

[37.] Wang, Y. H., Hu, C., Hurst, C. S., & Yang, C. C. (2014). Antecedents and outcomes of career plateaus: The role of mentoring others and proactive personality. *Journal of Vocational Behaviour, 85* (3), 319-328.

[38.] Weng, R-H., Huang, C-Y., Tsai, W-C., Chang, Li-Yu., Lin, S. E., & Lee, M-Y. (2010). Exploring the impact of mentoring functions on job satisfaction and organisational commitment of new staff nurse. *BMC Health Service Research, 10* (240), 1-9.

[39.] Whitely, W., Dougherty, T.W., & Dreher, G.F. (1991). Relationship of career mentoring and socioeconomic origin to managers and professionals early career progress. *Academy of Management Journal*, 34(2), 331-351.

[40.] Whitely, W.T., & Coestsier, P. (1993). The relationship of career mentoring to early career outcomes. *Organization Studies*, 14(3), 419-441.

[41.] Wu, M., Zhuang, W. L., & Hung, C. C. (2014). The effects of mentoring functions on repatriate adjustment: Moderating role of core self-evaluation. *International Journal of Intercultural Relations, 43* (November), 177-188.

[42.] Young, A. M., & Perrewe, P. L. (2000). What did you expect? An examination of career related support and social support among mentors and protégés. *Journal of Management*, *26*(4), 611-632.