MANUALLY OPERATED FIRE FIGHTING ALL-TERRAIN ROBOT WITH FIRE EXTINGUISHER USING ARDUINO MICRO CONTROLLER

Vijayalaxmi

Department of ECE, Vignan Institute of Technology and Science, Deshmukhi

ABSTRACT

Robots are usually designed to make our lives easier. Although high-pressure water spray can extinguish most fire, there are still some situations that it cannot deal with. For instance, fire in chemical factory that has the potential to explode and skyscrapers that are too high for high-pressure water spray to reach both require robots. In these situations, in which fire fighters cannot get too close to the scene, robot can be integrated with a fire extinguisher to put out a fire inside the building. The all-terrain bots can be used to fulfil tasks under dangerous situations that human beings cannot deal with, such as nuclear leakage and burning buildings now here in our concept we are extending the all-terrain robot with a fire extinguisher attachment. This attachment is controlled manually by an operator. This robot successfully performs the task of a fire fighter in required emergency situations. Bu using such kind of bots we can reduce the casualties of the fire fighters, as we know a human life has more value than a robot.

Keywords: Arduino, Fire, Fighter, Joystick, Robot

I. INTRODUCTION:

Robotics is part of Today's communication. In today's world ROBOTICS is fast growing and interesting field. It is simplest way for latest technology modification. Now a day's communication is part of advancement of technology, so we decided to work on robotics field, and design something which will make human life simpler in day today aspect. Thus we are supporting this cause. Robots are usually designed to make our lives easier. The Robots can be used to fulfil tasks under dangerous situations that human beings cannot deal with, such as nuclear leakage and burning buildings now here in our concept we are extending the Robot with a fire extinguisher attachment. This attachment is controlled manually by an operator.

Robotics is the branch of technology that deals with the design, construction, operation, structural disposition, manufacture and application of robots and computer systems for their control, sensory feedback, and information processing. During fires in relatively large building, dousing the structure through windows and roof openings allows for control of the fire but remaining fires within the building may last. This requires firefighters to enter said structure, which may have become structurally unstable, in search of surviving fires which may endanger the firefighter due to lack of visibility and breathable air. Removal of the human factor in task where the user may experience non-necessary danger has led to introduction of remote controller vehicles. These devices are capable of doing as the human user desires through a series of interactions between machine

and user. The possibility for these robots to be controlled remotely allows the user to have eyes and ears in the field without the need to physically endangering him/herself. Firefighting has become a curious field where robotics is being applied, to the point where competitions are held for handheld robots to extinguish randomly positioned fires, as well as companies approaching the concept as an untapped robotic market. The proposed robot design allows for sensing and dousing of small fires through manual means. The robot will be able to sense a fire from any position within its working range allowing for manual control of the robot by the user, who in turn is able to 'interact' with the environment as necessary while having constant feedback with the need of a computer screen.

II. PROJECT OBJECTIVES

The objectives for this project are:

i. To study a robot which can search, detect and extinguish burnt area immediately and develop a program using ARDUINO IDE to control the movement of the robot. Besides, lean how to connect the microcontroller.

ii. To design the robot that detects the fire and then puts off the fire.

III. LITERATURE SURVEY

Today, fire companies are both paid and volunteer. The technology is far more advanced than in the earlier times. Fire fighters wear full heat resistant gear and are equipped with oxygen tanks and high pressure fire houses. Companies such as AFT (Advanced Fire fighting Technology) are working to make fire fighting safer and more effective with low-pressure Water Mist and CAFS (compressed air foam systems). The London based company, Qinetiq has been commissioned to deploy a team of three systems to respond to fires where Acetylene gas is present.[4] When this gas is present in canisters, fire fighters are forced to sit back and watch the fire until after the gas has exploded. The three systems each have a specific job and can keep the human fire fighters out of danger. Other companies, Brazilian based ARMTEC, Las Vegas based InRob and iSystem, inventors of the Roomba, have also been developing system technology for firefighting. The technology is far from perfect however and will be continuously developed in the coming years.

The history of fire fighting can be dated back to the times of Ancient Egypt where hand pumps were used to fight fires. However, it wasn't until 1699 in France, that fire fighting became modernized. Here, François du Mouriez du Périer introduced the first commercially provided fire pumps to the City of Paris. In the 1800's helmets were introduced to protect the fire fighters. The first steam powered fire engine was used in Cincinnati Ohio on April 1, 1853.[4] This was also the first full time paid fire department in the United States. However, in 1907, the first internal combustion engine fire engines were developed. These lead to the extinction of the steam engine fire engine by 1925.

IV. BLOCK DIAGRAM

Figure 1 gives functional block diagram of robot

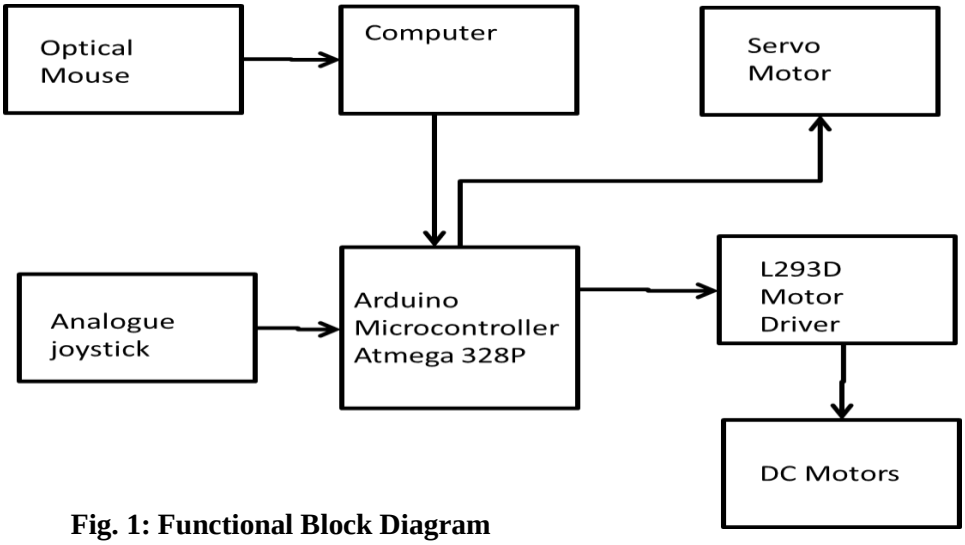

Fig. 1: Functional Block Diagram

Here the inputs given from the keyboard or the remote control will be given to the arduino micro controller, as programmed the micro controller will give outputs to the motor drivers, depending on the inputs given by the controller the driver drives the wheels accordingly.

The following figure 2 explains the rotation of the camera attached to motor

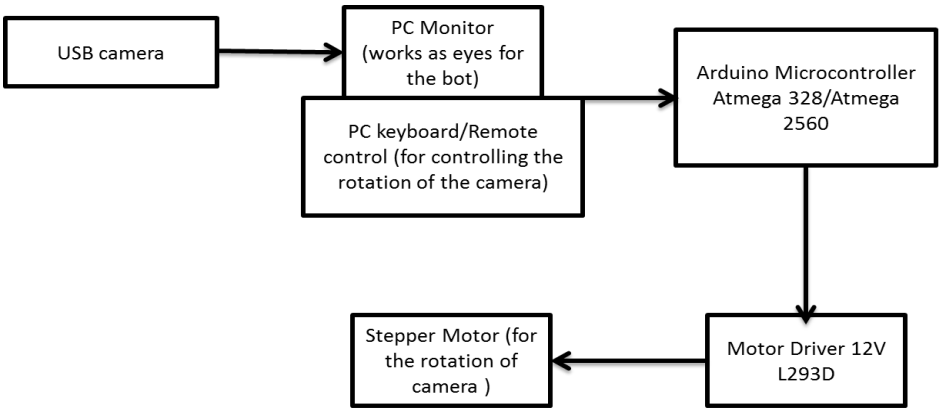

Fig.2: Block Diagram for Rotation of Camera

Here the USB camera is just for the operator to see where the robot is going. The camera is directly connected to the monitor through whom the operator controls the bot.The operator can rotate the camera using a servo motor. The operator can rotate the camera through an angle of 360’ and reverse.

V. RESULTS

It is robots that autonomously detects and extinguish fire. It manually detects fire and arduino board is used for processing. Fire extinguisher along with electronic valve(actuator) is used to extinguish the detected fire. The robot rotates while actively scanning for fire. This scanning is performed manually. When a fire is detected, it moves in the direction of fire an stops in front of it and trigger the extinguisher to turn out the fire. Since the arduino board can supply only 5v which is insufficient for driving motor, motor driver is used. With the help of motor driver, clockwise and anticlockwise rotation of motor can be easily achieved. Motor driver must be supplied with a supply voltage of 5v -9v. Ground must be connected to the ground pin of arduino board. Since this robot needs to carry a fire extinguisher, dc gear motor having enough torque must be selected. Here, metallic gear motor with 60rpm, having 10-12kg/cm torque. General fire extinguishers are heavier and difficult to be transported or triggered. A spray type one will be most convenient and affordable. In case of general type, an electronic valve should be used to release the gas or foam. For the spray type, electronic actuator can be used. In this project, i have used spray type extinguisher an instead of actuator, a cam mechanism is used to apply pressure on the nozzle. Cam mechanism consists of a metallic cam connected to a gear motor. It presses the nozzle knob as it rotates. A separate motor driver is used to drive this motor. The following figure 3 image shows the final fire fighting robot.

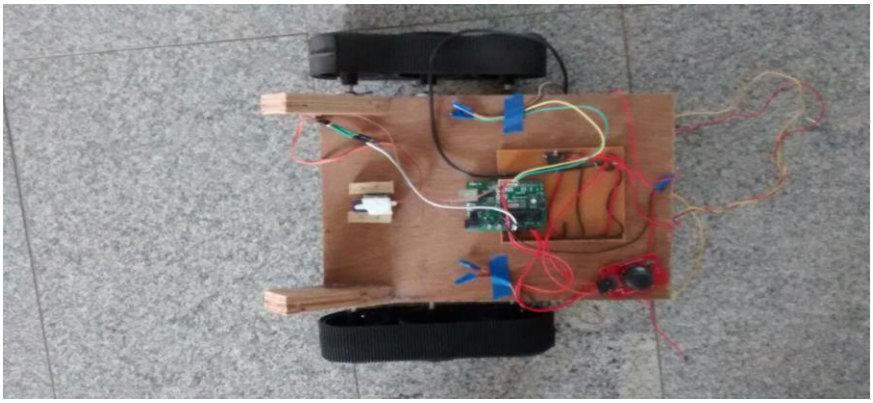

Fig.3: Final Fire Fighting Robot

VI. CONCLUSION:

This paper has presented a unique vision of the concepts which are used in this particular field. It aims to promote technology innovation to achieve a reliable and efficient outcome from the various instruments. With a common digitalized platform, these latest instruments will enable increased flexibility in control, operation, and expansion; allow for embedded intelligence, essentially foster the resilience of the instruments; and eventually benefit the customers with improved services, reliability and increased convenience. The nineties witnessed quantum leaps interface designing for improved man machine interactions. The Mechatronics application ensures a convenient way of simplifying the life by providing more delicate and user friendly facilities in computing devices. Now that we have proven the method, the next step is to improve the hardware. Instead of using cumbersome modules to gather information about the user, it will be better to use smaller and less intrusive units.

 ISBN: 978-93-86171-20-7

REFERENCES

1. Visual Basic for electronics engineering applications By Vincent Himpe

2.Wireless communication technologies: new multimedia systems By Norihiko Morinaga

3. www.wikipedia.com, Firefighter robot, its benefits and its recent developments.

4. www.ece.okstate.edu/old/abet/Assessment/.../FireFightingR obot.pdf

5. Encyclopedia of Fire fighter surveillance robot

6. http://playground.arduino.cc/interfacing/processing

7. http://arduino.cc/en/Guide/Windows

8. http://arduino.cc/en/Guide/HomePage

9. https://processing.org/