First International Conference on NexGen Technologies
Sengunthar Engineering College Tiruchengode, Namakkal Dist. Tamilnadu (India)
05th - 06th January 2018, www.conferenceworld.in ISBN: 978-93-86171-90-0

DTMF LOAD CONTROL SYSTEM USING PIC MICROCONTROLLER

[1]Manjunathan.G, [2]Murali.G.M [1], [3]Mohan.N.S, [4]Manikandan.S

[1,2,3]Student, EEE, Sengunthar Engineering College, Tiruchengode, (India)

[4]Assistant professor, EEE, Sengunthar Engineering College, Tiruchengode, (India)

ABSTRACT

The human mind always needs information of interest to control systems of his/her choice. In the age of electronic systems it is important to be able to control and acquire information from everywhere. Although many methods to remotely control systems have been devised, the methods have the problems such as the need for special devices and software to control the system. This paper suggests a method for control using the DTMF tone generated when the user pushes mobile phone keypad buttons or when connected to a remote mobile system. The proposed work has been done experimentally and has been verified in real time.

I.INTRODUCTION

The remote control technologies have been used in the fields like factory automation, space exploration, in places where human access is difficult. Controlling the domestic system regardless of time and space is an important challenge. As the mobile phone enables us to connect with the outside devices via mobile communication network regardless of time and space, the mobile phone is a suitable device to control domestic systems. This paper proposes a method to control a domestic system using a mobile phone, irrespective of the phone model and mobile phone carrier. The system suggested consists of the mobile phone normally registered in communication service and a computer that can receive a call from another phone. Existing methods for control and monitoring, using mobile phones have usage problems because the cost and need for continuous control. The mobile phone user controls the system by sending the DTMF tone to the access point. Mobile communication network coverage is larger than that of LANs, thus user can take advantage of mobile phones to control the system.

II.DTMF BASICS

DTMF is a generic communication term for touch tone (a Registered Trademark of AT&T). The tones produced when dialing on the keypad on the phone could be used to represent the digits, and a separate tone is used for each digit. However, there is always a chance that a random sound will be on the same frequency which will trip up the system. It was suggested that if two tones were used to represent a digit, the likelihood of a false signal occurring is ruled out. This is the basis of using dual tone in DTMF communication.

DTMF dialing uses a keypad with 12/16 buttons. When a button is pressed, both the row and column tones are generated by the telephone instrument. These two tones will be unique and different from tones of other keys. So, whenever we say that there is a low and high frequency associated with a button, it is actually the sum of two waves is

transmitted. This fundamental principle can be extended to various applications. DTMF signals can be transmitted over a radio to switch on or switch off home appliances, flash lights, motors, cameras, warning systems, irrigation systems and so on. These encoded data can be stored in a microcontroller and can be transmitted serially to another system for processing.

III.DECODER DESCRIPTION

The decoder used is M-8870. M-8870 includes a band split filter that separates the high and low tones of the received pair, and a digital decoder that verifies both the frequency and duration of the received tones before parsing the resulting 4-bitcode to the output bus.

The M-8870 decoder uses a digital counting technique to determine the frequencies of the limited tones and to verify that they correspond to standard DTMF frequencies. A complex averaging algorithm is used to protect against tone simulation by extraneous signals (such as voice) while tolerating small frequency variations. The algorithm ensures an optimum combination of immunity to talk off and tolerance to interfering signals (third tones) and noise. When the detector recognizes the simultaneous presence of two valid tones (known as signal condition), it raises the Early Steering flag (ESt). Any subsequent loss of signal condition will cause ESt to fall.

IV.CIRCUIT DIAGRAM

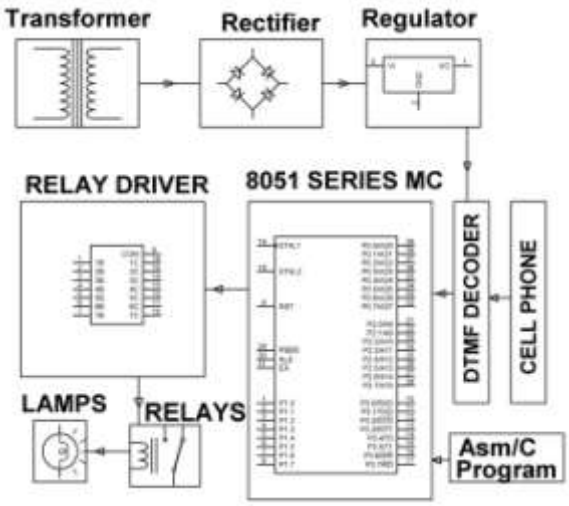

Fig. Circuit Diagram of DTMF Load Control System

V.PROPOSED WORK

The message is transmitted by calling the second mobile phone and typing in the desired number corresponding to the required control effort at the transmitter end. When the handset of the phone at the receiver end is picked up or the phone is picked up automatically by the use of AT commands, the messages can be typed on the number pad of the transmitting phone. The receiver end comprises of input device, decoder, microcontroller, computer and a mobile phone.

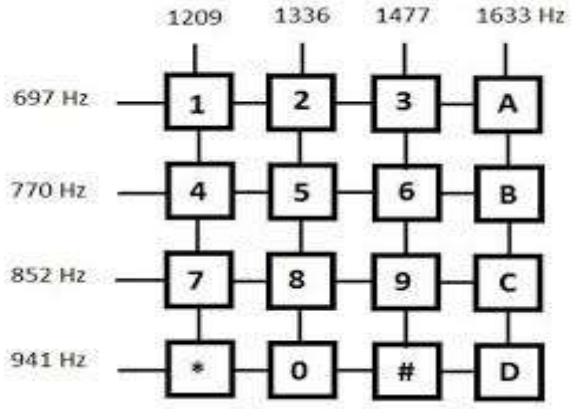

Fig. Key sequence in keyboard

The input section consists of a mobile/landline phone, condenser microphone and an audio amplifier. The microcontroller is connected to the parallel port of a computer, and is connected to a relay which performs the required action. The computer also helps by responding to the input by playing a suitable audio file representing the status of the system, which can be heard at the transmitter end immediately as the key is pressed. Once the connection is established between the two phones, whatever phone key is pressed at the transmitting end, the corresponding DTMF tone is heard in the ear piece of the receiver phone. The ear piece is connected to a condenser microphone which picks up the DTMF tone. Its output is amplified by the audio amplifier and this output is fed to the DTMF decoder. The DTMF decoder will give the corresponding BCD value of the tone visual indicator when the valid signal is received by the system.

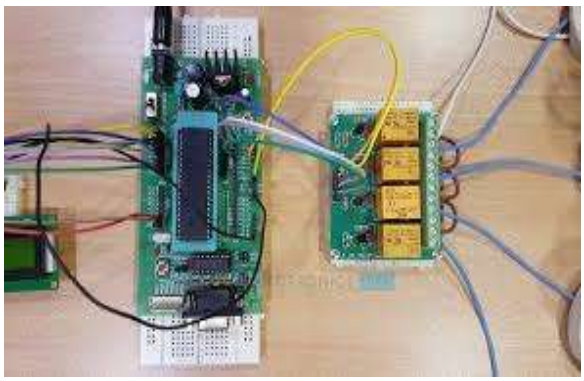

Fig. Working Model of DTMF Load Control System

The user can know the status of the message by pressing any key which is not assigned to any of the specific task. The computer, through the receiver end mobile phone sends an SMS as soon as fault is detected in the system.

VI.APPLICATIONS

This setup with a little modification can be adapted to the following applications.

1) Combination Lock

2) Home Security System

3) Mobile / Wireless Robot control

4) Wireless Radio Control

5) Continuous monitoring of system status

6) Remote Switches

7) Reporting during car accidents

VII.CONCLUSION

This paper presents a method to control a domestic system using the DTMF tone generated by transmitting telephone instrument when the user pushes the keypad buttons of the mobile phone connected to the remote domestic system. This control method uses commercial mobile communication networks as the path of data transmission. This enables the user to control the by sending the mobile phone DTMF tone. This system is implemented in the 2G mobile communication network, so video data cannot be obtained. Future work includes research on the robot ICICI-BME 2009 Proceedings 72 ICICI-BME 2009 Bandung, Indonesia 5 control system in the 3G mobile communication networks. This will facilitate controlling the remote robot, using the DTMF of mobile phone with video data from the remote mobile robot's camera.

REFERENCES

[1] Yun Chan Cho and Jae Wook Jeon, "Remote Robot control System based on DTMF of Mobile Phone" IEEE International Conference INDIN 2008, July 2008.

[2] M J. Callahan, Jr., "Integrated DTMF receiver," ZEEE J. Solzd-State Czrcuzts, vol. Sc-14, pp. 85-90, Feb. 1979.

[3] M. Callahan Jr, "Integrated DTMF Receiver," IEEE Transactions on communications, vol. 27, pp. 343-348, Febrary 1979.

[4] R. Sharma, K. Kumar, and S. Viq, "DTMF Based Remote Control System," IEEE International Conference ICIT 2006, pp. 2380-2383, December 2006.

[5] Oppenheim, Alan V. and Schafer, Ronald W. Digital Signal Processing. Prentice-Hall of India, 1989.

[6] Er. Zatin Gupta, Payal Jain and Monika, A2Z Control System DTMF Control System, Global Journal of Computer Science and Technology, Volume 10, Issue 11, October 2010.

[7] Roshan Ghosh. DTMF Based Controller for Efficiency Improvement of a PV Cell & Relay Operation Control Smart Home Systems, International Journal of Engineering Research and Applications. Vol. 2, Issue 3, May - Jun 2012, pp.2903 – 2911.

[8]http://www.sudani.sd/PublicOne/Content/Internet/HSDPA?language=en