First International Conference on NexGen Technologies
Sengunthar Engineering College Tiruchengode, Namakkal Dist. Tamilnadu (India)
05th - 06th January 2018, www.conferenceworld.in ISBN: 978-93-86171-90-0

DESIGN OF BURNING ARRANGEMENT IN SHAFT KILN BY USING PLC CONTROLLER

Sathis Kumar.M[1], Mohan Kumar.C[2], Valasudurai.P[3], Veerappan.R[4]

[1,2,3]Student , [4]Assistant Professor , Department of Mechanical Engineering

Sengundhar Engineering College, Thiruchengode(India)

ABSTRACT

OIL CONSERVATIONis an important criteria in our nation. The effective utilization of the furnace oil in shaft kiln will reduce the operational cost and cost of sintering production per tonne will be considerably reduced.

Also excessive quantity of fuel usage in the shaft kiln causes the operational difficulties like burner nozzle chocking, poor heating illumination, high electrical consumption, ring formation on the shell, high routine maintenance cost and poor pollution environmental control etc.

Present oil consumption in 60T shaft kiln = 325 Ltr/hr.

= 130 Ltr/T of sintering

Therefore to reduce and to eliminate the above operational difficulties using **Programmable Logical Controller (PLC).**

I. INTRODUCTION

ABOUT THE COMPANY

The BURN STANDARD COMPANY LIMITED, Salem refractory unit became wholly owned subsidiary of SAIL and renamed as SAIL Refractory Company Limited (SRCL), a subsidiary unit of BBUNL (Bharat BihariUdyog Nigam Limited). The company was started in the year 1895, during the British Rule in India. It was only manufacturing powdered Magnesium Oxide with less silica content in the Rotary Kiln.

Since 1962, the company also manufactured refractory bricks in the year 1989's a new Rotary Kiln was also established to manufacture large number of refractory bricks to take the customer demand. BSCL supplies the refractory bricks to various steel plants in India and also exported it to foreign countries about 850 employees are working in the varies section of Burn Standard Company Limited.

II.MANUFACTURE OF REFRACTORY BRICK

MINING OF MAGNESITE

Magnesite is mined by means of open bench casting method with 4.5 meters of bench height and about 20 meters bench width. The manpower is disturbed along the length of forces to collect the magnesite. It's release after drilling and blasting. The soil generated after primary collection is removed to the outside dumping yard.

Soil handlings are dozers. Shovels, dumpers etc. Auxiliary equipment used are wagon Drill, jack hammers and compressors.

III.PRODUCTION OF DEAD BURNT MAGNESITE

The term Dead burnt magnesite indicate that the magnesite is uncreative with moisture Because it had been sintered at a high temperature 165˚C high enough to enable it to be used in brick making the production of Dead burnt magnesite in corporate two process.

i. Primary crushing in primary Crushing House

ii. Sintering in the rotary kiln

They are briefly explained as follows:

IV.PRIMARY CRUSHING HOUSE

Dumped magnesite is the first fed in to jaw crusher where the size is reduced to two or three inches and then fed into cone crusher which reduces the size further. By means of bucket elevators the magnesite is stored in bunkers, after passing it through vibrating screen where less size particles are remove. Then it passed through perforated belts incorporating spray water system which removes silica to certain extend and stored in hopper, from where it is fed in to a shaft kiln via weight feeder which helps for constant discharge in to kiln.

V.GRINDING SECTION

BALL MILL

It consists of a slowly rotation drum which is filled with grinding media varies size of steel balls. Inside of the ball mill is lined with perforated liner plates which is made of alloy steel which was shown in the Fig 1.1.

Fig 1.1 Ball Mill

TUBE MILL

It is a Tube like mill, the length of the drum is higher than the ball mill consist of three compartments. In the First Compartment, the grinding media used is bigger size, in the second compartment grinding media used in smaller than the first compartment and the third compartment very smallest balls are used drives are fitted at the

end of each material is finally passes through the screen which is at outlet of the mill to the bucket elevator and secondary bunkerswhich was shown in the Fig 1.2.

Fig 1.2 Tube Mill

VI.SHAFT KILN ARRANGEMENT

PREPARATION OF SHAFT KILN FOR STARTING

Before starting the shaft kiln it is necessary to check thoroughly the following:-

i. Refractory lining shaft kiln etc.
ii. Raw materials feeding mechanism.
iii. Dampers.
iv. Main Drive for shaft kiln.
v. I.D. Fan.
vi. Lubrication system and heating system.
vii. The kiln may be started provided all the above mentioned units are in good condition which was shown in the Fig 3.1.

Fig 3.1 Shaft Kiln Arrangement

 ISBN: 978-93-86171-90-0

IGNITION OF BURNER

i. For igniting the burner read manufacturer's instructions carefully.
ii. Operate the pilot burner with main damper practically closed.
iii. Start the I.D. Fan before igniting the main burner.
iv. Maintain a vacuum of 1 to 2.5 mm of watercolumn in firing hood by adjusting the I.D. Fan Damper.

VII.EXCESS AIR OPTIMISTION

THEORITICAL AIR FUEL RATIO FOR FURNACE OIL

Carbon and Hydrogen are the principal constituents of furnace oil. Sulphur is present in significantly lower percentage. In any combustion process, the reaction between the fuel and the oxygen in the air release heat energy.

Furnace oil contains

i. 86% Carbon
ii. 12% Hydrogen
iii. 2% Sulphur

Air composition by volume

i. 21% Oxygen
ii. 79% Nitrogen

Air composition by weight

i. 23% Oxygen
ii. 76.7% Nitrogen

Oxygen required to burn carbon is

$$C + O_2 \rightarrow CO_2$$

12 32 44

$$\frac{32 \times 0.86}{12} \rightarrow 2.293Kg$$

Oxygen required to burn hydrogen is

$$2H_2 + O_2 \rightarrow 2H_2O$$

4 32 36

$$\frac{32 \times 0.12}{32} \rightarrow 0.96Kg$$

Oxygen required to burn Sulphur is

$$S_2 + O_2 \rightarrow SO_2$$

32 34 64

 ISBN: 978-93-86171-90-0

$$\frac{32 \times 0.02}{32} \rightarrow 0.02\text{Kg}$$

Total oxygen required to burn furnace oil is

2.293 + 0.96 + 0.02 = 3.273 Kg

Weight of Air required for complete combustion

$$\frac{100 \times 3.273}{23.3} \rightarrow 14.05 \text{ Kg of air / Kg of fuel}$$

VIII.FURNACE OIL ADDITIVE

FURNACE OIL

Furnace oil are the fractions distilled between lubricating oil and bitumen. The heavy oil thermally cracked/ decomposed at high pressure and temperature to reduce its viscosity before it is used as a fuel oil. At times heavy fuel oil is blended with naphtha, gas oil to improve its atomizing capability through burners.

On one extreme is the light fuel oils produced from cycle oil of cracking units and on the other extreme is heavy fuel oils produced from residues of crude distillation units, thermal catalytic units, and cooker. Intermediate grade/viscosity of fuel oils are made by blending of distillates and residual stocks. Visbreaking of residual stocks is very important process in the production of fuels oils.

FLASH POINT (ASTM D93-47)

It is the temperature to which the oil must be heated to give off sufficient vapour to perform an inflammable mixture with air. It various with apparatus and procedure and both must be specified when flash point is started. Flash point – 66°C.

POUR POINT (ASTM D97-47)

Pour is the lowest temperature at which the oil will flow under prescribed condition. Pour point- 60°C.

SPECIFIC GRAVITY

Specific Gravity is the ration between the weight of any volume of oil at 60˚ F and weight of an equal volume of pure water at 60˚ F. It always used for solid petroleum products and often for liquids. Specific Gravity- 960kg/m^3.

CALORIFIC VALUE

Calorific value - 41868 kJ/ kg

BURNERS - OPERATION AND MAINTENANCE

The purpose of the burner is to convert the fuel oil into millions of small droplets.

The process is called atomization and its principal aim is to produce a high ratio of surface to the volume in the oil to facilitate evaporation and subsequent combustion.

ATOMIZATION

Atomization breaks the fuel oil into fine particles that readily mix with the air for combustion.

The fuel then burns with a clean hot flame, being vaporized and oxidized by the resulting combustion before cracking takes place. In pressure atomizing burners the fineness of spray increases as pressure increases and a viscosity decreases. When no 6 oil is burned, a burned, a pulsating flame if viscosity is reduced to a point where preheat temperature tends to vaporize the fuel.

The advantage of atomization of oil are

i. Atomizing burners can be used with heavier grade oil. Atomization can be adapted to a large applications because of large capacity range.
ii. Complete combustion is assured by the ability of the small particles to penetrate turbulent combustion.
iii. Accurate metering of the fuel is possible resulting in uniform combustion condition.

IX.PROGRAMMABLE LOGIC CONTROLLER

PLC &INPUT/OUTPUT ARRANGEMENTS

A programmable logic controller (PLC),or **programmable controller** is a digital computer used for automation of industrial processes, such as control of machinery on factory assembly lines. Unlike general-purpose computers, the PLC is designed for multiple inputs and output arrangements, extended temperature ranges, immunity to electrical noise, and resistance to vibration and impact.

FLOW CONTROL VALVE

A flow control valve regulates the flow or pressure of a fluid. Control valves normally respond to signals generated by independent devices such as flow meters or temperature gaugeswhich was shown in the Fig 7.3.

Control valves are normally fitted with actuators and positioner. Pneumatically-actuated globe valves are widely used for control purposes in many industries, although quarter-turn (modified) ball and butterfly valves are also used.

CONTROL VALVE CAVITATION

Cavitation damage is characterized by a rough cinder like appearance of the eroded surface. Cavitation can be treated by several means. The first is to eliminate the cavitation by managing the pressure drop. Specialist control valve trims can be used for this purpose. A second method is to minimize the damage by isolating the cavitation away from valve surfaces and by hardening the surfaces it does impact, the third way is to modify the process.

 ISBN: 978-93-86171-90-0

FLOW METER

Mechanical flow meters are the most commonly used flow measurement devices. They have advantages and disadvantages depending on the application they are used for. In general terms the advantages are they are inexpensive to manufacture, can be used for nearly all applications (some of the other type flow meters cannot be used with flammable liquids for instance) and they are readily available. The primary disadvantages of the mechanical flow meters is that most of them employ moving parts making them susceptible to wear and they often constrict the flow of liquids or gasses through them.

There are a number of different types of mechanical flow meters that are appropriate to specific uses.

Fig 7.4 Flow Meter

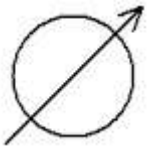

Table Specifications of PLC

Accuracy	**:** ±0.25% of span (terminal point)
Operating temp	**:** -10 to 60˚C (14 to 140˚F)
Temp error	**:** (zero & span) 0.08%/˚C (0.04%/˚F)
Storage temp	**:** -20˚ to 70˚C (-4 to 158˚F)
Battery life	**:** 3" >1000 hrs. 4.5" >3600 hrs.
Wetted materials	**:** 17-4 SS (sensor), 316 SS (socket)
Case size	**:** 76 mm (3") dia., 114 mm (4.5") dia.
Case material	**:** 3" stainless steel, 4.5" fiberglass Reinforced thermoplastic
Case Encl.rating	**:** Weatherproof, IP65 (NEMA 4)
Socket size	**:** Standard 1/4 NPT
Socket connection	**:** Lower
Display	**:** 5-digit LCD
Power options	**:** DC power 12 to 36 V DC, 2VA max; Loop Power 12 to 36 V DC)

7.14.3 USER SELECTABLE FEATURES

Table 7.2 User Selectable Features

7.14.4 Electrical rating on Switch Options:

 ISBN: 978-93-86171-90-0

(i) Option S1 or S2 DPG92xx only.

or (ii) SPDT switches, 30 V DC Range.

PLC LADDER DIA

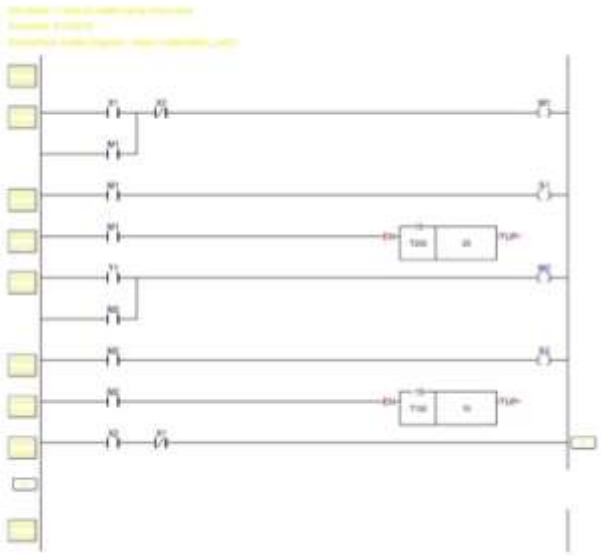

X1 - Start button

X2 - Stop button

M1 - Motor 1

M2 - Motor 2

P1 - Pump 1

P2 - Pump 2

T1 - Timer 1

T2 - Timer 2

X.CONCLUSION

According to the M/s Cone & Co burner arrangement, we can fully utilize the steam circuit to improve the burning efficiency as well as to reduce the consumption of furnace oil.

After detailed study in all aspects, we can reduce 3% to 4% of total furnace oil consumption in 60 Tone shaft kiln. Ultimately we can strictly following aspects in shaft kiln operation to improve below the performances.

3 to 4% furnace oil consumption.

Reduce the operational cost.

Reduce the kiln maintenance cost.

Improving the quality of the sintering process.

Reduce the sintering cost per tonne of production

REFERENCES

[1] From the website link, www.tidco.com/Fused 20% Magnesia Dead 20% Burnt 20%_Magnesite.doc, "*Fused Magnesia Dead Burnt Magnesite*".

[2] Vladimir Monor, "*Grinding in Ball Mill with Modelling and Process Control*" volume 12 Sofia 2012, from Institute of Information and Communication Technology.

[3] Fellow. P. 1988, "*Driers Used On Food Processing Technology*" Ellis Horwood, England.

[4] Robert O Stanely, Corporation of Kansas field on July 18, 1962 (Serial no.220112), "*Vertical Shaft Kiln and Method of Separation*".

[5] Report on, "*Performance of Brick Kilns in Tunnel NAM DINH Province,2005*", TERI (Project Report No.2004BE31).

[6] From the website link, "www.burner.com/ Officeof Industrial Technologies.doc" on May 2002, for Excess Air Optimization "*Check Burner Air to Fuel Ratio Process Heat Tip Sheet #2*".