13th International Conference on Recent Innovations in Science, Engineering and Management
NANASAHEB MAHADIK COLLEGE OF ENGINEERING ICRISEM 18
Peth Naka, Tal: Walwa, Dist: Sangli
23rd February 2018 www.conferenceworld.in ISBN : 978-93-87793-02-6

"Design and Fabrication of Material Handling System for Solid Waste in Sugar Factory"

Prof. J.J. Patil[1], Adamane Dheeraj Ramesh[2], Kushire Aniket Kiran[3], Todkar Mangesh Balaso[2], Desai Nishan Raghunath[5], Jagtap Prathamesh Nandakumar[6]

[1]*Department of Mechanical Engineering,*
Nanasaheb Mahadik college of Engineering,Peth, (India)
[2,3,4,5,6]*Department of Mechanical Engineering,*
Nanasaheb Mahadik college of Engineering,Peth, (India)

ABSTRACT

The removal of the solid waste from flowing water is more important aspect for the water treatment plant. The deposition of solid waste in water treatment plant duct affects the efficiency of the plant. Now days the company using the man power for removal of waste from water by providing screening to the flow and remove manually by spade. This process is more fatigue for workers as they are performing it continuously so this work is an emphasis on reducing the labor fatigue. The main purpose is to develop a simple mechanism to remove solid waste.By using bucket conveyor arrangement the removal of solid waste is carried out. The belt bucket allows flow of water and due to screening arrangement provided the solid waste is carried out from water and separated

Keywords: Fabrication, Solid Waste, Sugar Factory

I.INTRODUCTION

The principle of the designed machine is quite same as stone crusher. In this setup there are two shafts which carrying pulley on which belt is moving. The buckets which provided with holes on its taper side and steel net are provided inside the bucket. The drive is given to upper shaft by means of motor. With the belt buckets are moving opposite to flow of effluent. Due to holes and steel net provision it allows the water to flow but it resists the flow of solid waste (bagasse and different waste.)

Material handling can be defined as an integrated system involving such activities as moving, handling, storing and controlling of materials by means of gravity, manual effort or power activated machinery.

By using bucket conveyor arrangement the removal of solid waste carried out. The belt bucket allows flow of water and due to steel net arrangement provided the solid waste is carried out from water and separated.

II. IDENTIFICATION OF PROBLEM

When going to finding out the industrial related problem for our project, we are came in contact with the nearer industry and then started to visit the industry. When visited the sugar factory we find that there are various problems related with the waste and by product management.

When we analyze the survey we found out the following various problem

- Solid waste separation from flowing water
- Solid fluid like grease and oil separation from flowing water
- Utilization of byproducts specially bagasse and molasses

These are the problems associated with industry. Now days the industry started to work on the second problem which is related to separation of oil and grease from waste water. For solid waste separation they are using man power in two shifts. For minimization of this work, it is required to develop a simple mechanism which will reduce the human effort.

III.SOLUTION OF PROBLEM

Instead of manual work, it is possible to make process automatic so with the help of inclined chain conveyor, motor, bucket arrangement, the process can be automatic. Also pumps (Stationery bottom-impeller lift pump) can be used to separate the solid waste and If possible, oil separator also can be used to separate oil present in effluent and to make the process automatic with mechanized setup.

IV.METHODOLOGY

Following Methodology is used to achieve the aim and objective of the study and research is shown below

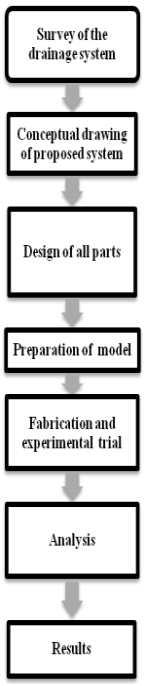

IV.EFFLUENT TREATMENT PLANT SECTION (E.T.P)

4.1 Introduction

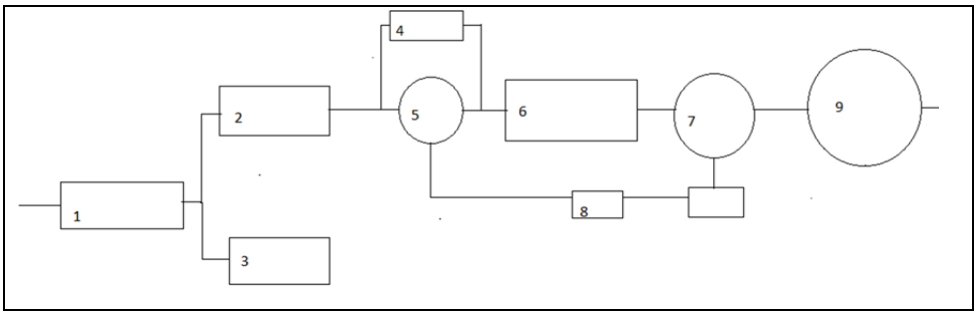

Flow diagram of E.T.P section

1. Screen oil grease trap
2. Equalization tank
3. Monthly washing tank
4. Anaerobic filter
5. Primary settling tank
6. Aeration tank
7. Secondary clarifier
8. Sludge brine beds
9. Storage tank

1. Primary treatment:

This consists of screen chamber oil and grease trap and "V" Notch for flow measurement. The flows then taken to equalization tank.

2. Equalization Tank:

An equalization tank of size 10M×10M×3.0M, of 8 hours capacity is provided and agitator of 5H.P. turbine type is fixed for achieving effective mixing.

3. Monthly Washing Tank

Monthly washing tank of 810 cubic meter capacity .A periodical cleaning water is stored in this tank and then taken in equalization tank for further treatment.

4. Anaerobic filter

Anaerobic Filter is of 810 cubic meter capacity. The efficient water from equalization tank is taken in anaerobic for filtration. The filtered water further sends to primary settling tank.

5. Primary settling tank

A circular setting tank of 6m dia. with peripheral outlet weir and central inlet in provided a mechanical scrapper centrally driven to collect sludge in the bottom catch pit is provided

6. Aeration tank

The effluent from P.S.T. is taken to aeration tank for biological treatment and extended aeration system with two days detention period in the tank is provided This is arranged by providing two aerators of 30hp at the shaft.

4.2Operation and maintenance of sugar ETP

Operation and maintenance of sugar has become one of major issue in much of sugar industries.

Due those much of sugar factories are outsourcing the ETP by paying much of higher cost with respect to the actual need of investment. An improper maintained ETP leads to destabilization of ETP and resulting in not

achieving the prescribed statutory norms and leading to legal action. A proper maintenance of ETP requires a proper co- ordination between the process personals and ETP operators and Environmental Engineer.

A well Few of the conditions laid by Corporate Responsibility for Environment Protection (CREP) agreed in 2003 by the Industry and the Govt. of India are

1. The ETP stabilization should start commence one month prior to start of crushing Season. This ensures the conditional requirements to take full effluent load in to ETP.
2. The entire treated effluent should be used for land application like irrigation etc. no Effluent should be disposed to streams like river, lake etc.
3. The effluent quantity should not exceed 100 l/ton of cane crushed.
4. A storage capacity of 15 days for treated effluent shall be provided to take care of no demand period of irrigation.

V.MATERIAL HANDLINGSYSTEM

Material handling can be defined as an integrated system involving such activities as moving, handling, storing and controlling of materials by means of gravity, manual effort or power activated machinery. Material handling (MH) involves "short-distance movement that usually takes place within the confines of a building such as a plant or a warehouse and between a building and a transportation agency."

The effluent treatment plant requires the treated water which is free from solid waste, scale,ash,bagasse, etc. to work with high efficiency. For the working of ETP plant with higher efficiency need to remove the waste from water for that requires the workers to work in shift but workers cannot work continuously with higher efficiency and the effluented water causes fatigue to the workers.

Hence the project is related with the removal of solid waste from water and then this solid waste is supplied to the container by using hopper.

VI.DESIGN AND SELECTION OF COMPONENT

5.1 Design of the System.

Following are the steps which followed for design procedure

5.1 Selection of conveyor

5.2Distance between two shafts

5.3 Selection of revolution and number of buckets

5.4 Motor Selection

5.5 Gear Box

5.6 Design of chain

5.7 Design of sprocket wheel

5.8 Design of shaft

5.9 Bearing selection

5.10 Support

Conveyor:-

The conveyor is shown in FIG.:1. In between chain conveyor and belt conveyor, chain conveyor selected. Because when the belt conveyor is used, there will be possibility of slipping of belt due to water contact with belt. And also due to wet conditions this may affect the proper working of the system.

Distance between two shafts. :-

The distance between two shafts is 4.5 meter. The slanted line joining the two shafts is making an angle of 45 degree with the surface and hence by selecting this distance we get the required measurements.

Selection of revolution, buckets and screening:-

The buckets are shown in FIG.:3. For this system speed of conveyor should be less than 40 rpm. With this speed, the solid waste collected in bucket will fall in hopper due to gravity. If the speed is more than 40 rpm, due to peripheral velocity solid waste will not be at proper place that is in hopper.

Screening is used for separating the water and solid waste particle from waste water. :-

Screening is static or mechanically vibrating and here using the static type of screening. Screening is made up of high tensile steel, stainless steel, polyethylene.

Design of chain:-

The available chain with the industry

Pitch=75mm

Roller diameter=25mm

Width=30

Design of sprocket wheel:-

The sprocket is shown in FIG.:1.

$$D=\frac{p}{\sin\left(\frac{180}{z}\right)}$$

= 333 mm

Z=13 (even number of teeth)

Selection of shaft:-

The shaft is shown in FIG.:1.

The shaft is under the bending load and torsion stress. The torsion stress is considerably small. From the design consideration we are selecting the material for shaft is of plain carbon steel (45c8).

Here by using standard dimension of the shaft of 45mm.

FIG.1 components of system

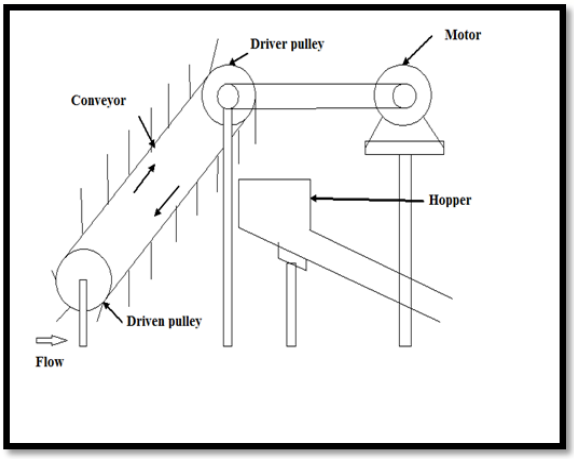

FIG.2 schematic diagram of Solid Waste removal system

FIG.:3 actual setup of Solid Waste removal system

VII. CONCLUSION

By using this system we can reduce the fatigue of labors. Also we can remove the solid waste from effluent water time to time. So that it reduces clogging of drainage line due to solid waste. From this system running cost is reduced up to 61% with increased efficiency of effluent treatment plant.

VIII. ACKNOWLEDGEMENTS

It is a pleasant task to express gratitude towards everyone who has helped for making this Project during the entire duration of preparation for this Project, we received endless help from a number of peoples and feel that this report would be incomplete if we don't convey graceful thanks to them.

First and foremost we take the opportunity to express my gratitude towards Padamabhushan Krantiveer Dr. Naganathanna Nayakawadi Hutatma Kisan Ahir Sahakari Sakhar Karakhana Ltd. Naganathannanagar, Walwe after that we thanks to Prof.J.J..Patil for their valuable guiding us throughout the entire process with their valuable suggestions, without which this idea won't have executed.

We would also like to take privilege in expressing our gratitude towards other teaching and non-teaching staff for their advice and kind cooperation.

REFERENCES

[1.] Agarwal, S.K. (1996). Industrial Environment Assessment and Strategy (Ed.) APH Publishing Corporation, New Delhi, 415.

[2.] Kumar, (1986). Pollution Control Handbook, Utility Publications, Secunderabad, 57.

[3.] Wiley, N.Y., (1960). The Disposal of Municipal Refuse (Ed.) H.D.B. Parsons.

[4.] Lency, L.E. (1971). Plating Operations in Industrial Control Handbook, McGraw-Hill Inc., N.Y., 12, 16.

[5.] Hasen, P.E. and Jorgensen, S.E. (1991). Introduction to Environmental Management, (Eds.) Elsevier, N.Y.,5.

[6.] Harush D P and Hampannavar, Total water management, operation and maintenance, troubleshooting of ETP in sugar industry, U S INTERNATIONAL JOURNAL OF ENVIRONEMNTAL SCIENCES Volume 5, No 3, 2014.