13th International Conference on Recent Innovations in Science, Engineering and Management
NANASAHEB MAHADIK COLLEGE OF ENGINEERING ICRISEM 18
Peth Naka, Tal: Walwa, Dist: Sangli
23rd February 2018 www.conferenceworld.in ISBN : 978-93-87793-02-6

A LITERATURE REVIEW ON DESIGN OF CYCLONE SEPERATOR

Desai Ramdas Sharad[1],Patil Amol Shankari[2],Patil Aniket Anandrao[3],Patil Rohan Deepak[4],Jadhav Suhas Arun[5],Nikam Vaibhav Bhimrao[6],Prof.A.K.Parekh[7]

[1,2,3,4,5,6,7]*Department of Mechanical Engineering, Shivaji University Kolhapur(India)*

ABSTRACT

Cyclone is the most commonly used device, to separate dust particles from gas and dust flow. This review paper provides a wide perspective of various designed cyclone separator for collection of tiny dust particle. A review of literature was undertake & discover stairmand the optimum design technic also computational fluid dynamic approach for pressure drop in cyclone separator also its clears the study of performance parameter in cyclone design.

I.INTRODUCTION

Cyclone separator provides a method of removing particulate matter from air streams at low cost and low maintenance. In general, a cyclone consists of an upper cylindrical part referred to as the barrel and a lower conical part referred to as shown in Figure 1. The air stream enters tangentially at the top of the barrel and travels downward into the cone forming an outer vortex. The solid particles entering the cyclone immediately bifurcate into two layers of dust due to the eddy current based on the secondary flow on the upper cover surface in the coaxial space between cyclone body and exit pipe. One of them goes around the coaxial space on the upper cover surface and rotates around the exit pipe with the gas flow. The other rotates and descends along the surface of the cyclone body. Then, on the surface of the cone, the dust layer, which is pressed onto the cone surface by the centrifugal force, descends aided by gravitational force and descending airflow. There are many types of cyclones for the purpose of solid particle separation. However, the following are the most typical: returned flow or reversed flow, axial flow and rotary flow with tangential injection of the second gas flow into the cyclone body. The historical transition of cyclones development can be found in Crawford, Storch and Ogawa, where many old and interesting types of cyclones are available.

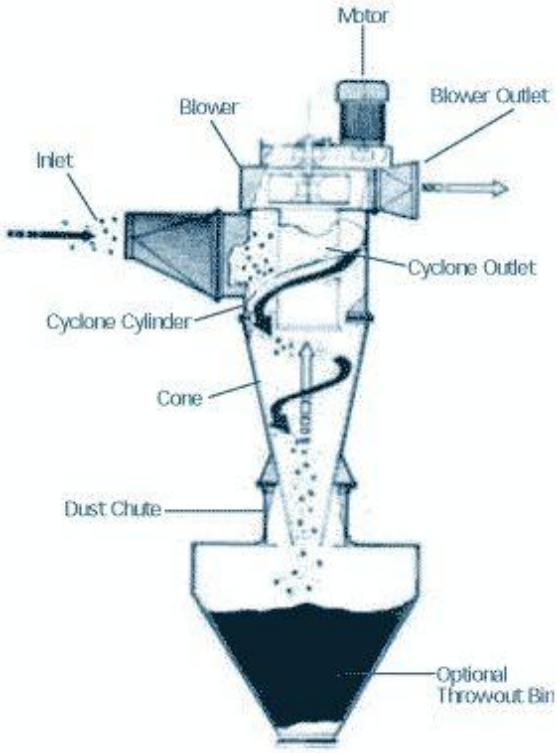

Figure 1: Cyclone Geometry

In this paper Jadhave, design cyclone and study it`s performances parameters.“DESIGN OF CYCLONE AND STUDY OF ITS PERFORMANCE PARAMETERS” In this paper Jadhav design cyclone and study its performance parameters. He has done experimental analysis and CFD simulation for cyclone. In this paper he calculated that pressure drop is more for single inlet cyclone than symmetrical inlet cyclone. Means the pressure drop is depending on the inlet velocity for the same model. It is observed that the pressure drop is increases as the inlet velocity increases for same model.By doing changes at inlet geometry of cyclone i.e. two symmetrical inlets the flow gets divided in to two parts. The performance parameters of symmetrical inlet cyclone are optimum than single inlet cyclone. It also proved that as inlet velocity increase the cyclone efficiency also increases for same model.In this paper he study height of cone and results are concluded that the cone height has significant effect on the performance of the cyclone. The pressure in the cyclone various along the X axis as shown in contours. The pressure first decreases and then increases. The minimum pressure occurs at the mid section (X=0). The graph shows variation in thepressure along the radial direction. The curve is in U shape explain the decrease and increase of pressure. The velocity in cyclone first increase from the centre and then decrease at the wall. The curve will be in M shape or reversed W shape, the velocity is high at the middle of the centre and the wall.

The variation in the flow temperature slightly varies the pressure for every 20k. The velocity of the flow doesn’t vary with the temperature. So we can say that the temperature can not affect the performance of the cyclone because of the slight variation wa can neglect the effect of temperature.The inlet geometry is the most important

geometrical parameter of the cyclone design. By varying the inlet dimension there is a huge variation in the pressure in the cyclone falls drastically by decrease in the inlet dimensions. For every 2mm decrease in the inlet height and 1mm decrease in width gives 20% decrease in the pressure. By the decrease of this inlet dimensions the pressure drop also decrease and we can say that the one with minimum pressure drop is works more efficiently. So the inlet dimension shows a larg effect on the performance of the cyclone. The velocity also decreases by the increase in the inlet geometry, if velocity decreases the collection efficiency decreases so the inlet dimensions must be high. So thecyclone with the inlet height 10mm and inlet width 5mm in better design.

"DESIGN ANALYSIS OF CYCLONE SEPERATOR" In this paper Reddy Deere et at studies design and analysis of cyclone separator. In this paper they given stairmands optimised design also they give energy equation and continuity equation they have also done CFD analysis of cyclones in detail.TEMPERATURE ANALYSISThis analysis involves various flow studies at various temperatures. the stairmands design is used for the simulation in fluent. The same setup is used for the temperature analysis as the stairmands design analysis.

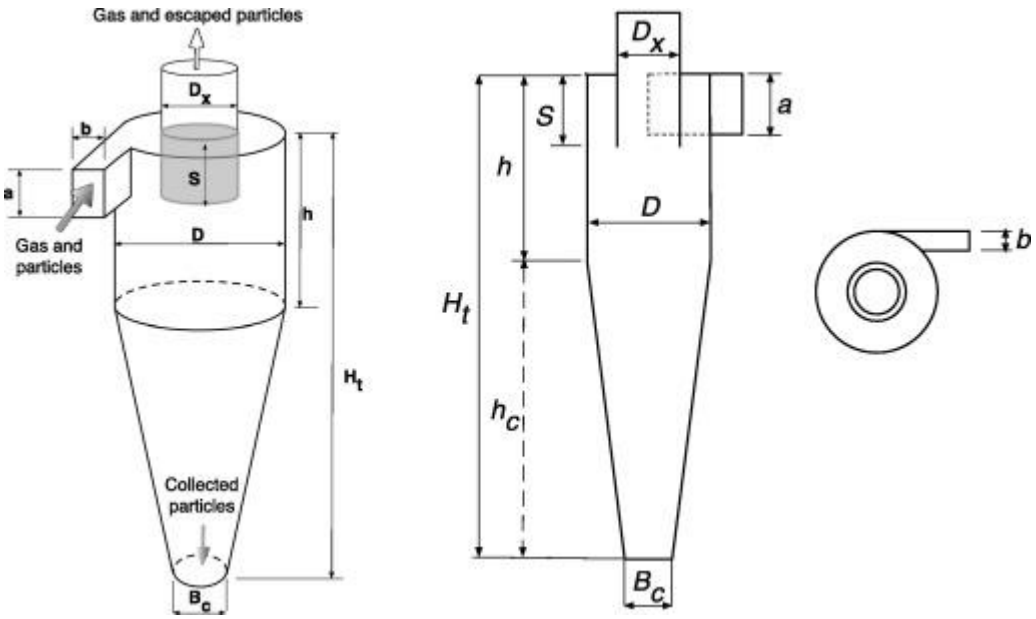

Figure 2: cycloe geometry in solid works

Geometry	a/D	b/D	Dx/D	S/D	h/D	H/D	B/D
Stairmand'sHight Efficiency	0.5	0.2	0.5	0.5	1.5	4	0.375

Additional to the energy equation is activated so start the temperature analysis. In the velocity inlet boundary conditions the temperature of inlet flow is added. This study involves in the simulation of the cyclone at 4 different temperatures.the variation in the pressure and velocity are noted and compared. The effect of the temperature is justified.In this paperGawali studies "COMPUTATIONAL FLUID DYNAMICS APPROACH FOR PREDICTION OF CYCLONE SEPARATOR PRESSURE DROP".The simulation was carried out for five cyclone models having Dc 0.203 m, 0.25 m, 0.3 m, 0.35 m, 0.4 m at different inlet velocity. The low pressure drop values areobtained for cyclone separator model having Dc 0.25 m. From the simulation it was observed that the pressure drop varies with changing theinlet velocity.

II.CONCLUSION

From the study and analysis of different papers, it is observed that, the pressure drop and cyclone efficiency varies with inlet velocity. The efficiency of cyclone increases with the decrease in dimensions of cyclone body diameter, cyclone width, operating temperature and cyclone width inlet. The pressure drop increases with the increase in inlet velocity; but pressure drop decreases significantly with the rise in temperature. Comparison of performance, between symmetrical inlet cyclone and single inlet cyclone shows that, symmetrical inlet cyclone is optimum than the conventional cyclone with single inlet.

REFERENCES

[1]Mahesh R. Jadhav**, "**DESIGN OF CYCLONE AND STUDY OF ITS PERFORMANCE PARAMETERS",International Journalof Mechanical Engineering and Robotic Research Vol.3, No. 4 October 2014.

[2] Bharath Raj Reddy Dere, A. Divya Shree, G. Mahesh Babu, S. Rajiv Rao, "DESIGN ANALYSIS OF CYCLONE SEPERATOR", International Journal Of Engineering Research and Technology (IJERT). Vol. 3, Issue 8, August 2014.

[3] Snehal S. Gawali, M. B. Bhambere, "COMPUTATIONAL FLUID DYNAMICS APPROACH FOR PREDICTION OF CYCLONE SEPARATOR PRESSURE DROP", International Journal of Mechanical Engineering and Robotic Research VOL. 4,No.1, January 2015.

[4] Konal Singh, TusharWanjari, "Wheat Flour Mill Cyclone Separator", An International Journal of Engineering & Technology (A Peer Reviewed & Indexed Journal) Vol. 3, No. 4 (April, 2016) eISSN: 2394-627X