11th International Conference on Researches in Science, Technology and Management
Osmania University Campus, Hyderabad (India) RSTM-18
11th March 2018 www.conferenceworld.in ISBN : 978-93-87793-05-7

Patient Monitoring System

Harshal R. Patil[1] , Dipali S. Garge[2]

[1,2]Department of Computer Science and Engineering,
Prof Ram Meghe College of Engineering and Management,
Badnera-Amravati Amravati, Maharashtra, (India)

ABSTRACT

From today world of automation, the field of biomedical is no longer aloof. Application of engineering and technology has proved its significance in the field of biomedical. It not only made doctor more efficient but also helped them in improving total process of medication.

In multispecialty hospitals, where there are a huge number of wards and in each ward there is a spate of patients, doctors cannot supervise the patient each and every moment. For this doctors form the time slots and each ward is visited after specific time difference. But patients may have some problems in between these time slots. This leads to inconveniency of patient and hospital management may feel helplessness about the problem.

The Patient monitoring system for doctors provides solution for this. It continuously provides following information to doctors.

1. *Heartbeat of patient*
2. *Body temperature of patient*

Keywords*: *Arduino, Bio-Sensors: Biomedical monitoring system, Bluetooth, Heartbeat, Temperature.

I. INTRODUCTION

The present patient monitoring systems in hospitals allow continuous monitoring of patient vital signs, which require the sensors to be hardwired to nearby, bedside monitors or PCs, and essentially confine the patient to his hospital bed. Even after connecting these systems to particular patient, a paramedical assistant need to continuously monitor and note down all the vital parameters of a given patient by keeping track of all of his/her records manually. Adopting such a method is error prone and may lead to disaster in the case of a human error. In the current proposed system the patient health is continuously monitored by the Mobile multi patient monitoring system and the acquired data is transmitted to a centralized microcontroller using Wireless Sensor Networks.

A Bluetooth transceiver is connected to every patient monitor system that consumes very low power and is extremely small in size. These are specifically designed for low power consumption, with minimal circuit components intended for small packet, long distance range applications and typically consist of a low power controller with minimal resources and interface capabilities. These Bluetooth is having a data transfer rate of about 10 m. So the Wireless Sensor Networks seem to be a perfect fit for remote patient monitoring. To improve the accuracy and to increase the efficiency of the above processes a real time patient monitoring system based

on Wireless Sensor Networks and a centralized microcontroller is integrated with a Bluetooth module is designed. This paper describes an independent system that automatically logs vital parameters of patients for easy access. The data is accessible to doctors through mobile device for convenience if needed.

II. BLOCK DIAGRAM

The following figure shows the block diagram of Bluetooth based personal medical kit. Slight fluctuation in the normal heart rate, body temperature can be measured to the help of this medical kit. It will forward data to the microcontroller where it will be compared with normal value of body temperature and heart rate. Depending upon the parameters considered by monitor, if it finds any parameter disturbed the result is send to the doctor and he may immediately take the necessary section. Thus without wasting the time patient can be treated whereas sending the report can be done using Bluetooth. Bluetooth based heart rate monitoring and the display system is a portable and a best replacement for the old model stethoscope, which is less efficient. It is a combination of a HIGH POWER LED based heart rate monitor interface with a Bluetooth module to transmit the heart rate of patient to a remote location. The functioning of this device is based on the truth that the blood circulates for every heartbeat that can be sensed by LED. Depending upon the rate of circulation of blood the heart beat per minute is calculated. This calculated value is communicated to the person through a Bluetooth to the receiver which are interfaced to it. Bluetooth based heart rate monitoring and the display system is a portable and a best replacement for the old model stethoscope, which is less efficient.

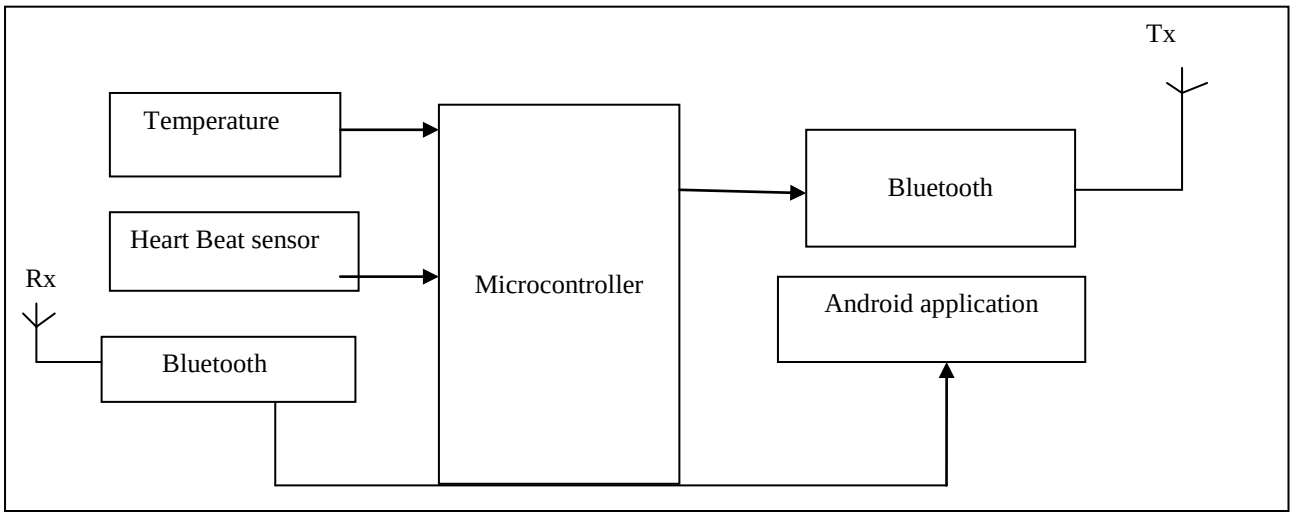

Fig 1: block diagram of patient monitoring system

It is a combination of a HIGH POWER LED based heart rate monitor interface with a Bluetooth module to transmit the heart rate of patient to a remote location. The functioning of this device is based on the truth that the blood circulates for every heartbeat that can be sensed by LED. Depending upon the rate of circulation of blood

the heart beat per minute is calculated. This calculated value is communicated to the person through a Bluetooth to the receiver which are interfaced to it. The temperature sensor we are using here in LM35, which senses the body temperature of the patient and it is connected to the microcontroller. The heartbeat of the patient can be sense by #1157 produced by SUNROM technology, this is the advance version of the sensor which is put into the finger of the patient and the output of this sensor is connected to the microcontroller. All this data is in analogue form so we have to convert it into digital form, so we are using the ADC pins of the microcontroller for converting analogue to digital form, all the digital data is transmitted to the receiver section where the current state of the patient can be seen. In transmitter section, The received data is then connected to the microcontroller ATmega328, then this data is given to computer or mobile port.

2.1 HEARTBEAT SENSOR

Principle of Heartbeat Sensor

The heartbeat sensor is based on the principle of photo plethysmography. It measures the change in volume of blood through any organ of the body which causes a change in the light intensity through that organ (a vascular region). In case of applications where heart pulse rate is to be monitored, the timing of the pulses is more important. The flow of blood volume is decided by the rate of heart pulses and since light is absorbed by blood, the signal pulses are equivalent to the heart beat pulses. There are two types of photo plethysmography:

Transmission**:** Light emitted from the light emitting device is transmitted through any vascular region of the body like earlobe and received by the detector.

Reflection**:** Light emitted from the light emitting device is reflected by the regions.

2.2 TEMPERATURE SENSOR

The LM35 series are precision integrated-circuit temperature devices with an output voltage linearly-proportional to the Centigrade temperature. The LM35 device has an advantage over linear temperature sensors calibrated in Kelvin, as the user is not required to subtract a large constant voltage from the output to obtain convenient Centigrade scaling. The LM35 device does not require any external calibration or trimming to provide typical accuracies of ±¼°C at room temperature and ±¾°C over a full −55°C to 150°C temperature range. Lower cost is assured by trimming and calibration at the wafer level. The low-output impedance, linear output, and precise inherent calibration of the LM35 device makes interfacing to readout or control circuitry especially easy. The device is used with single power supplies, or with plus and minus supplies. As the LM35 device draws only 60 µA from the supply, it has very low self-heating of less than 0.1°C in still air. The LM35 device is rated to operate over a −55°C to 150°C temperature range, while the LM35C device is rated for a −40°C to 110°C range (−10° with improved accuracy).

The LM35-series devices are available packaged in hermetic TO transistor packages, while the LM35C, LM35CA, and LM35D devices are available in the plastic TO-92 transistor package. The LM35D device is available in an 8-lead surface-mount small-outline package and a plastic TO-220 package.

2.3 BLUETOOTH

HC-05module is an easy to use Bluetooth Serial Port Protocol module, designed for transparent wireless serial connection setup. the HC-05 Bluetooth Module can be used in a Master or Slave configuration, making it a great solution for wireless communication. This serial port Bluetooth module is fully qualified Bluetooth V2.0+EDR (Enhanced Data Rate) 3Mbps Modulation with complete 2.4GHz radio transceiver and baseband.

The Bluetooth module HC-05 is a master/slave module. By default the factory setting is slave. The Role of the module (Master or Slave) can be configured only by at commands. The slave modules cannot initiate a connection to another Bluetooth device, but can accept connections. Master module can initiate a connection to other devices. The user can use it simply for a serial to port replacement establish connection between MCU and GPS, PC to your embedded project, etc.

2.4 ARDUNO UNO

The Arduino Uno is a microcontroller board based on the ATmega328 (datasheet). It has 14 digital input/output pins (of which 6 can be used as PWM outputs), 6 analog inputs, a 16 MHz crystal oscillator, a USB connection, a power jack, an ICSP header, and a reset button. It contains everything needed to support the microcontroller; simply connect it to a computer with a USB cable or power it with a AC-to-DC adapter or battery to get started. The Uno differs from all preceding boards in that it does not use the FTDIUSB-to-serial driver chip. Instead, it features the Atmega8U2 programmed as a USB-to-serial converter. The arduino Uno can be powered via the USB connection or with an external power supply. The power source is selected automatically. External (non-USB) power can come either from an AC-to-DC adapter (wall-wart) or battery. The adapter can be connected by plugging a 2.1mm center positive plug into the board's power jack. Leads from a battery can be inserted in the gnd and vin pin headers of the POWER connector. The board can operate on an external supply of 6 to 20 volts. If supplied with less than 7V, however, the 5Vpin may supply less than five volts and the board may be unstable. If using more than 12V, the voltage regulator may overheat and damage the board. The recommended range is 7 to 12 volts.

III. MICROCONTROLLER ATMEGA328

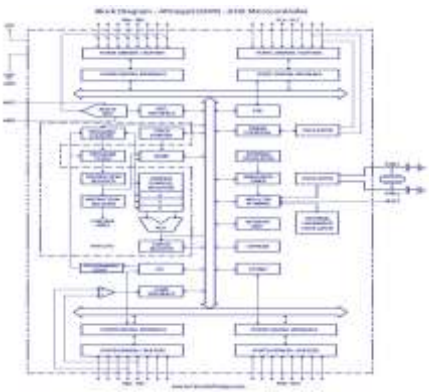

Fig 2: **block diagram of atmega328**

The Atmel®AVR®AVR core combines a rich instruction set with 32 general purpose working registers. All the 32 registers are directly connected to the Arithmetic Logic Unit (ALU), allowing two independent registers to be accessed in one single instruction executed in one clock cycle. The resulting architecture is more code efficient while achieving throughputs up to ten times faster than conventional CISC microcontroller The ATmega32 provides the following features: 32Kbytes of In-System Programmable Flash. Program memory with Read-

While-Write capabilities, 1024bytes EEPROM, 2Kbyte SRAM, 32general purpose I/O lines, 32 general purpose working registers, a JTAG interface for Boundary scan, On-chip Debugging support and programming, three flexible Timer/Counters with compare modes, Internal and External Interrupts, a serial programmable USART, a byte oriented Two-wire Serial Interface, an 8-channel, 10-bit ADC with optional differential input stage with programmable gain (TQFP package only), a programmable Watchdog Timer with Internal Oscillator, an SPI serial port, and six software selectable power saving modes. The Idle mode stops the CPU while allowing the USART, Two-wire interface, A/D Converter, SRAM, Timer/Counters, SPI port, and interrupt system to continue functioning.

The Power-down mode saves the register contents but freezes the Oscillator, disabling all other chip functions until the next External Interrupt or Hardware Reset. In Power-save mode, the Asynchronous Timer continues to run, allowing the user to maintain a timer base while the rest of the device is sleeping. This allows very fast start-up combined with low-power consumption. In Extended Standby mode, both the main Oscillator and the Asynchronous Timer continue to run. The device is manufactured using Atmel's high density nonvolatile memory technology. The On chip ISP Flash allows the program memory to be reprogrammed in-system through an SPI serial interface, by a conventional nonvolatile memory programmer, or by an On-chip Boot program running on the AVR core.

The boot program can use any interface to download the application program in the Application Flash memory. Software in the Boot Flash section will continue to run while the Application Flash section is updated, providing true Read-While-Write operation.

By combining an 8-bit RISC CPU with In-System Self Programmable Flash on a monolithic chip, the Atmel ATmega32 is a powerful microcontroller that provides a highly-flexible and cost-effective solution to many embedded control applications.

IV. SYSTEM FLOW CHART

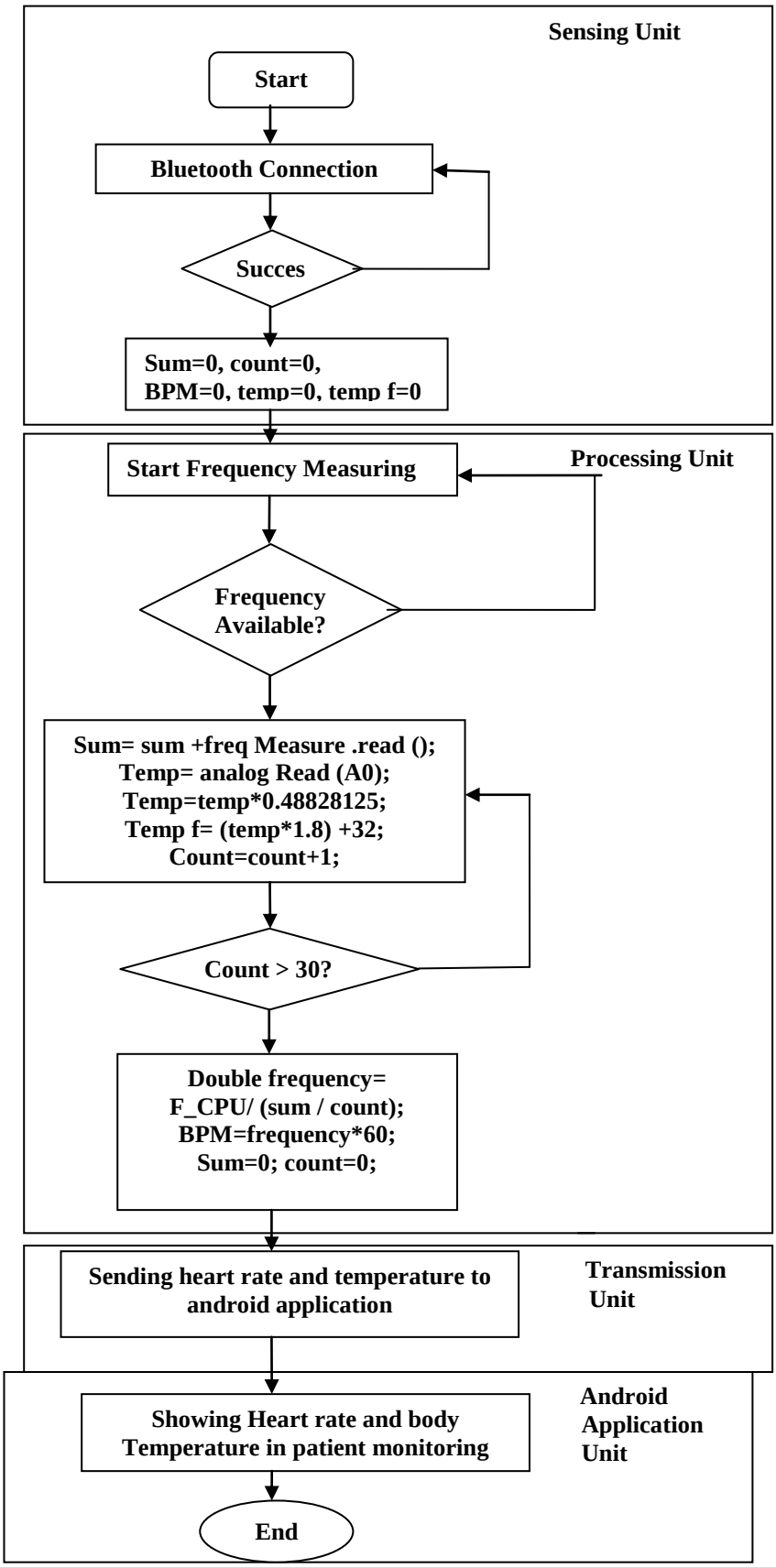

V. RESULTS

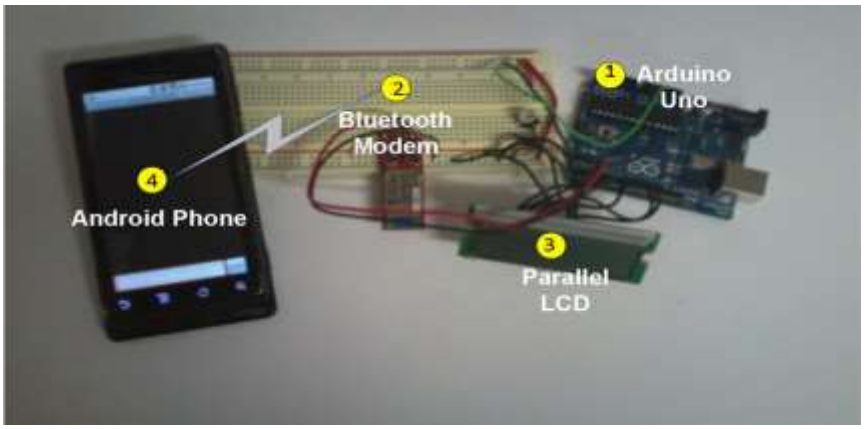

FIG 3. experimental setup

FIG 4. patient monitoring system

VI. CONCLUSION

The patient monitoring system using Bluetooth demonstrate significant improvements in outcomes by reducing hospital readmissions, improving the quality of care for patients with severe parameters when combining aggressive remote Tele-monitoring supported by a health care provider. The data provides evidence that the introduction of current state-of-the-art this technology allows rapid and accurate monitoring of patients with severe parameter. The

combination of these technologies and that parameter management by a health care provider is cost-effective and leads to outcomes and care.

VII. FUTURE ASPECTS

The system can be further improved in several aspects. Once the system requirement have been clearly defined, the hardware can be optimized, especially regarding its size, weight and consumption. Together with clinical analyses, the protocols to optimize the system performance should be established. New technology such as GPRS and UMTS could enhance the performance of the final product. Furthermore work in progress to develop and integrate a real time multichannel mobile telemedicine system capable of simultaneously transmitting medical data such as ECG Non Invasive Blood Pressure and SPO**2** work applying Bluetooth and GPRS technologies could be done, to make the system more flexible.

REFRENCES

Journal Papers:

[1] "Mobile-Phone -Based Remote Patient's Vital Signs Monitoring and Automated Alerts", International journal of computer science and mobile applications, Fareedud din, Atta-ur-Rehman Shah, Muhammad Ibrahim.

[2] "Android Application Developed to Extend Health Monitoring Device Range and Real-timePatient Tracking", ICCC 2013,IEEE 9th International Conference on Computational Cybernetics, P. Szakacs-Simon * , S. A. Moraru * and L. Perniu.

[3] "Android based patient monitoring system" International Journal For Technological Research In Engineering,May-2014, DeepModi 1 , JigneshVyas 2 , Priyank Shah 3 ME Scholar, 2 Associate Professor (H.O.D.), 3 Assistant Professor

[4] "A Mobile Software for Health Professionals to Monitor Remote Patients" IEEE 2012 Maneesha V Ramesh, SruthyAnand.

[5] "Wearable Sensor Data Fusion for Remote Health Assessment and Fall Detection Won-Jae Yi, OisheeSarkar, SivisaMathavan and JafarSaniie

[6] Y. Hao and J. Foster, "Wireless sensor networks for health monitoring applications," Physiological Meas., vol. 29, no. 11, pp. R27–R56, 2008.

[7] S. Ohta, H. Nakamoto, Y. Shinagawa, and T. Tanikawa, "A Health monitoring system for elderly people living alone," J. Telemedicine and Telecare, vol. 8, no. 3, pp. 151–156, Jun. 2002.

[8] Bluetooth Based Patient Monitoring System P. Vignesh1 , E. Sathya2 1, 2PG Scholar, Nandha Engineering College, Erode-52, India

[9] Mobile sensor data collector using Android smartphone Won-Jae Yi; Weidi Jia; Jafar Saniie