International Conference on Advance Studies in Engineering and Sciences
Sri Satya Sai University of Technology and Medical Sciences , Sehore (M.P.) ICASES-17
2nd December 2017, www.conferenceworld.in ISBN: 978-93-86171-83-2

INVESTIGATION RELATED TO MATHEMATICAL MOEDLING AND EXPERIMENT OF REGENERATIVE SHOCK ABSORBER

Gite Ankit Jayant

Research Scholar, Sri Satya Sai University of Technology and Medical Sciences, India)

ABSTRACT

For effective energy regeneration and vibration dampening, energy regenerative suspension systems have received more studies recently. This paper presents the dynamic modeling and a test system of a regenerative shock absorber system which converts vibration motion into rotary motion through the adjustment of hydraulic flow. Hydraulic circuit configuration achieves the one way flow and energy regeneration during both compression and extension strokes. The dynamic modeling is performed for the evaluation of design concept and the feasibility studies of regenerative shock absorber system theoretically. Based on simulated results, the efficiency of hydraulic transmission is optimized and validated in test system. The results show that the performance of hydraulic fluid, the features of rotary motion and the capability of energy regeneration are verified and compared between dynamic modeling and experiments. Meanwhile, the average power of 118.2W and 201.7W with the total energy conversion of 26.86% and 18.49% can be obtained based on experiments under sinusoidal inputs with 0.07854m/s and 0.1256m/s respectively.

I INTRODUCTION

Vehicles play an important role around the world. Meanwhile, the vehicles' energy harvesting and the improvement of energy efficiency have been more concerned for the last two decades. In 2012, the road transports accounted for 74% (39,468 Ktoe, thousand tons of oil equivalents) of total transport energy consumption in the UK [1]. For commercial vehicles, only 10 to 16% of fuel energy has been used to propel the driving [2]. Most of energy is wasted by the resistances from road conditions, frictions and thermal exhaust. However, the kinetic energy loss by shock absorbers is one of the main energy dissipation in vehicles. Conventional hydraulic shock absorber converted the vibration energy into the dissipation of heat to ensure the ride comfort and road holding.

Many manufactures and researchers are focused on the regenerative suspension system to convert more recoverable energy and decrease energy consumption while assuring the high performance of stabilities and road reliabilities. Since the later 1970s, researchers have analysed the feasibility of regenerative shock absorber theoretically. Karnopp

[3] showed that the mechanism and process for the reduction of vehicle energy consumption can be achieved with energy regeneration in conventional passive shock absorber, especially for electric and hybrid vehicles. The energy consumption in a 4 DOF model has been calculated which approximately 200W by 4 wheels on an irregular road by adjusting the relevant velocity between shock body and wheels [4-5]. In the study of Hsu [6], a General Motors 'impact' model has been performed to estimate the average of recoverable energy for each wheel which equal to 5% (100W) of entire vehicle power in motorway driving with the speed of 35.8mph. Zuo [7] investigated the potential energy regeneration by modelling of the road roughness and vehicle dynamics, and 100-400W from shock absorber at the driving speed of 96km/h can be recovered.

The oscillation in shock absorbers can also be converted into electricity which can power other devices or recharge battery by rotary/linear electromagnetic motor. Nakano [10-11] applied two linear DC motors to improve ride comfort by a self-powered active control. In Nakano's studies, one motor worked as generator to power the other as an actuator in order to adjust the performance of vibration. Suda [12] has proposed an electromagnetic damper which is composed of DC motor, planetary gear and a ball screw mechanism. DC motor can rotate in both directions to supply power and recover energy. Bose's active suspension, Michelin active-wheel and University of Texas' active suspension system (ECASS) are designed to improve the performances of suspension system and the capability of energy regeneration by active control strategies [13-15].

II DESIGN CONCEPT

As shown in Fig.1, a prototype regenerative energy shock absorber can be designed to consist of a hydraulic cylinder, four check valves, a hydraulic accumulator, a hydraulic motor, a generator, pipelines and an oil tank. In addition, the hydraulic motor is coupled with a DC permanent magnetic generator for converting the hydraulic flow energy into electricity.

The cylinder is added two ports by a double acting hydraulic cylinder. As the piston of the hydraulic cylinder moves reciprocally due to excitations of oscillating road profiles, the fluid in the cylinder will be forced to flow into the fluid chamber of the connecting hoses in front of the motor. Driven by the pressurized flow, the hydraulic motor will produce rotary motion which will drive the DC generator to produce electricity.

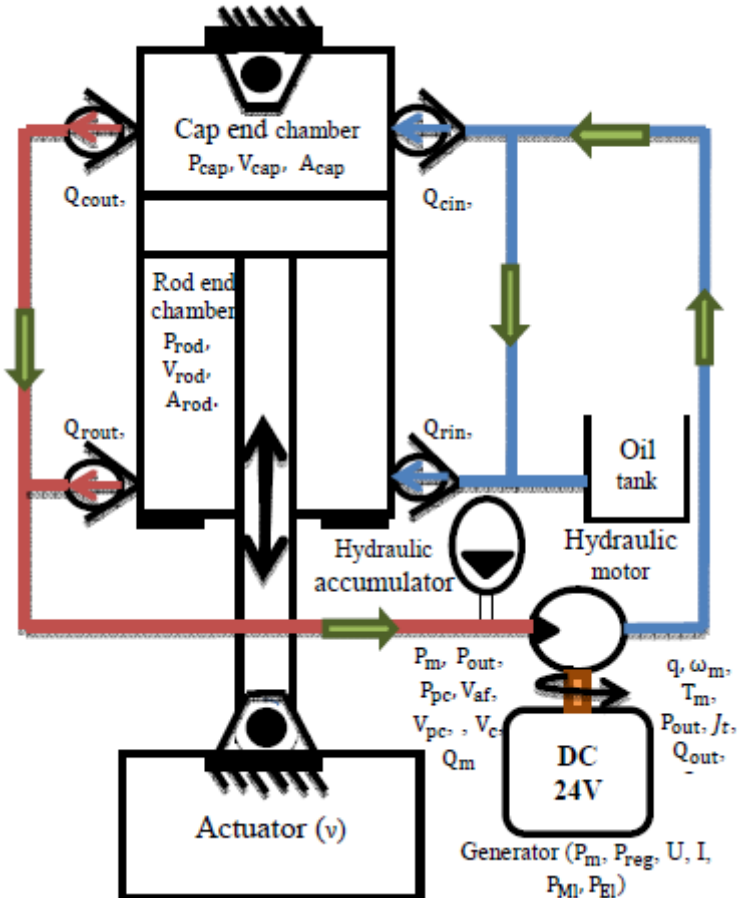

Figure 1. The schematic of regenerative shock absorber

In order to realize the continue flow for driving the hydraulic motor continuously, the flow direction is controlled by the four check valves and the pressure oscillation is adjusted by the hydraulic accumulator. To study the performance of energy regenerative shock absorber system, the road excitation is created by an actuator which can be controlled to produce different types of excitations for studying the performance and dynamics of different components.

III MATHEMATICAL MODEL AND ANALYSIS

To obtain accurate understandings of the dynamic behaviour of the system and determine parameters of each component, a dynamic model needs to be developed for analyzing the effects of different components on the performance of energy regeneration. In addition, the dynamic modelling will be critical for controlling damping forces to achieve the ride comfort.

Piston Motion

For the easy understanding of the system, the input which is generated by the actuator is assumed to vary in a sinusoidal way according to the form of

$$v = 2\pi f S \sin(2\pi f t) \qquad (1)$$

where f is the frequency and S is the amplitude. Based on (1), the rate of changing position of the piston S_a at any time can be calculated by

$$\dot{S}_a = v \qquad (2)$$

The volumes of the cap end V_{cap} and rod end chamber V_{rod} can be calculated by (3) and (4) respectively:

$$V_{cap} = A_{cap}(S_0 - S_a) = \frac{\pi \cdot D_{bore}^2}{4}(S_0 - S_a) \qquad (3)$$

$$V_{rod} = A_{rod}(S_0 - S_a) = \frac{\pi \cdot (D_{bore}^2 - D_{rod}^2)}{4}(S_0 - S_a) \qquad (4)$$

where, S_0 is the starting position of the piston referring to its lowest position.

Due to the motion of the piston the hydraulic oil will be forced to flow out from the cylinder chambers. For the flow going out through the check valves from the two cylinder chambers Q_{cout} and Q_{rout} can be calculated based on the Bernoulli's principle according to

$$\begin{cases} Q_{cout} = C_d \cdot A_{cv} \cdot sgn(P_{cap} - P_m)\sqrt{\frac{2}{\rho} \cdot |P_{cap} - P_m|} \\ \qquad for\ \ P_{cap} > P_m \\ Q_{rout} = C_d \cdot A_{cv} \cdot sgn(P_{rod} - P_m)\sqrt{\frac{2}{\rho} \cdot |P_{rod} - P_m|} \\ \qquad for\ \ P_{rod} > P_m \end{cases} \qquad (5)$$

In the same way the oil flow entering into the two chambers Q_{cin} and Q_{rin} can be calculated by

$$\begin{cases} Q_{cin} = C_d \cdot A_{cv} \cdot sgn(P_m - P_{cap}) \cdot \sqrt{\frac{2}{\rho} \cdot |P_m - P_{cap}|}, \\ \qquad for \quad P_m > P_{cap} \\ Q_{rin} = C_d \cdot A_{cv} \cdot sgn(P_m - P_{rod}) \cdot \sqrt{\frac{2}{\rho} \cdot |P_m - P_{rod}|}, \\ \qquad for \quad P_m > P_{rod} \end{cases} \quad (6)$$

Where C_d is the discharge coefficient; Acv is the area of check valve port; Pcap, Prod and Pm represent the pressures in the cap end chamber, the rod end chamber and the motor inlet chamber respectively; and ρ is the density of the oil.

The check valve is ready to open if the pressure out from hydraulic cylinder is higher than that in the other end, plus the cranking pressure is provided by the spring force. Hydraulic oil flows through the orifice and propel the laminar resistance if it is open. If check valve is closed, the leakage of flow is considered to pass the laminar resistance. The discharge coefficient which depends on geometry and distribution of orifice is used to calculate turbulent flow through orifices of check valve. The reduction of orifice area by cranking pressure and leakage area are neglected in modelling instead by a constant value.

With the flows and piston motions, the pressures in the two cylinder chambers can be calculated by

$$\dot{P}_{cy} = \begin{cases} \dot{P}_{cap} = \frac{\beta}{V_{cap}} (A_{cap} \cdot v - Q_{cout} + Q_{cin}) \\ \dot{P}_{rod} = \frac{\beta}{V_{rod}} (A_{rod} \cdot (-v) - Q_{rout} + Q_{rin}) \end{cases} \quad (7)$$

where the bulk modulus of hydraulic oil is β and can be obtained by Hoffmann's model[18]:

$$\beta = \beta_{Pmax}[1 - exp(-0.4 - 2 \times 10^{-7} P)] \qquad (8)$$

to reflect the dependency of hydraulic fluids compressibility on pressure amplitude, volume and entrained air. β_{Pmax} is reference bulk modulus. The entrained air induces inevitable air bubbles during the operation in test system which is effect on the efficiency of hydraulic flow.

$$V_{pc} = k_s \cdot P_{pc} \qquad (9)$$

$$V_{af} = \begin{cases} V_{pc}\left(\frac{P_{pc}}{P_m}\right)^{\frac{1}{k}} + V_c\left(1 - \frac{P_{pc}}{P_{cy}}\right)^{\frac{1}{k}} & for \quad P_{cy} > P_{pc} \\ k_s \cdot P_{cy}\,, & for\ P_{cy} \le P_{pc} \end{cases} \qquad (10)$$

$$\dot{P_m} = \frac{\beta}{V_t} \cdot (Q_{cout} + Q_{rout} - Q_m) \qquad (11)$$

$$V_t = V_{lm} + V_{af} \qquad (12)$$

$$Q_m = \frac{D_m \cdot \omega_m}{2 \cdot \pi} \cdot \eta_v \qquad (13)$$

$$P_{loss} = \frac{32\mu L\rho}{D_{pipe}{}^2} \frac{(Q_{cout} + Q_{rout})}{A_{cv}} \qquad (14)$$

$$T_m = \frac{D_m(P_m - P_{loss} - P_{out})}{2 \cdot \pi} \qquad (15)$$

Torque and Power

The hydraulic motor is coupled to the DC generator by a shaft coupling. Assuming that the rotational friction torque T_{rf} for the the DC generator and the motor is Trf, the moment of shaft inertia is Jm and load for generating electricity is Ti need, the rotational motion of the two motor will be

$$J_t \dot{\omega}_m = T_m - T_{rf} - T_l \qquad (16)$$

The calculations of moment of inertia for modelling and test are shown in (17). In test system, the mass of rotational components includes shaft, armature of generator and orbiting gear. Therefore, the total moment of inertia in modelling is given by:

$$J_t = \frac{1}{2} \cdot m_h \cdot r_h^2 + \frac{1}{2} \cdot m_g \cdot r_g^2 + \frac{1}{2} \cdot m_a \cdot r_a^2 \qquad (17)$$

$$T_{rf} = \begin{cases} \dfrac{\omega_{th} \cdot C_{tv} + \left((T_{bk} - T_c) \cdot e^{-\omega_{th} \cdot C_v} + T_c\right) \cdot \omega_m}{\omega_{th}}, \\ for \quad |\omega_m| < \omega_{th} \\ \omega_m C_{tv} + \left((T_{bk} - T_c) \cdot e^{-\omega_m \cdot C_v} + T_c\right) \cdot sgn(\omega_m)), \\ for \quad |\omega_m| \geq \omega_{th} \end{cases} \quad (18)$$

where, T_{bk} and T_c are breakaway friction torque and coulomb friction torque. C_{tv} and C_v are viscous friction coefficient and the coefficient of the transition between the static and the coulomb frictions. ω_{th} is the velocity of threshold. In modelling analysis, external load Ti is instead by a constant normally.

Rather than a constant load, the torque due to generator is modelled as

$$T_l = c \cdot \omega_m + T_{con} \quad (19)$$

to include the effects of the high speed fluctuation and the basic operation process of the DC generator under constant resistive load. The load coefficient c can be adjusted based on the electrical power output and motor average speed.

The effective mechanical power input Pinput can be calculated by:

$$P_{input} = P_{cap} \cdot A_{cap} \cdot v + P_{rod} \cdot A_{rod} \cdot v \quad (20)$$

During the experiment, the potential electrical power is obtained by measuring the voltage and current at the two terminals of a load resistor, which can be calculated by:

$$P_{reg} = U \cdot I \quad (21)$$

The power output by generator is always less than the mechanical power input from motor because of different losses such as the mechanical and electrical losses.

TABLE I. ADDTIONAL PARAMETERS IN MODELLING OF REGENERATIVE SHOCK ABSORBER SYSTEM

Symbol	Parameters		Symbol	Parameters	
	Value	*Unit*		*Value*	*Unit*
V_{cap}	$2 \cdot 10^{-4}$	m^3	V_{lm}	$0.16 \cdot 10^{-3}$	m^3
V_{rod}	$1.3 \cdot 10^{-4}$	m^3	η_v	63.5% 73.5%	@0.07854m/s @0.01256m/s
A_{cap}	$2 \cdot 10^{-3}$	m^2	J_t	0.003	kg/m^3
A_{rod}	$1.3 \cdot 10^{-3}$	m^2	T_{bk}	1	Nm
S_0	100	mm	T_c	0.01	Nm
C_d	0.6		C_{tv}	0.005	Nm/(rad/s)
A_{cv}	$3 \cdot 10^{-5}$	m^2	C_v	1	rad/s
β_{Pmax}	$1.8 \cdot 10^{9}$	Pa	ω_{th}	2	rad/s
k_s	$5.2 \cdot 10^{-13}$		c	0.0525	Nm/(rad/s)
k	1.4		T_{con}	0.2	Nm
L	0.75	m	μ	22	cSt

The components data has used in both test system and dynamic model. The key parameters for the dynamic analysis are shown in Table I. In addition, not only hydraulic motor efficiency, but also total torque and bulk modulus are varied with pressures which can be found in (8) and (11).

IV VALIDATING RESULTS AND DISCUSSION

A few amount of air contains in cylinder chambers and hydraulic circuit. In form of air bubbles in test system leads to the reduction of oil reliability and effective bulk modulus. And, air bubble is possible to produce unexpected noise and shock, and reduce the service life of cylinder. According to (6)-(8), the air exhaust valve is employed to minimize the air cavity and air bubble in hydraulic system. Oil tank is also used to compensate oil timely in return flow. In addition, based on (11) and (14), low dynamic viscosity of shock oil is employed and the length of hose is reduced to prevent pressure loss when oil flows through it.

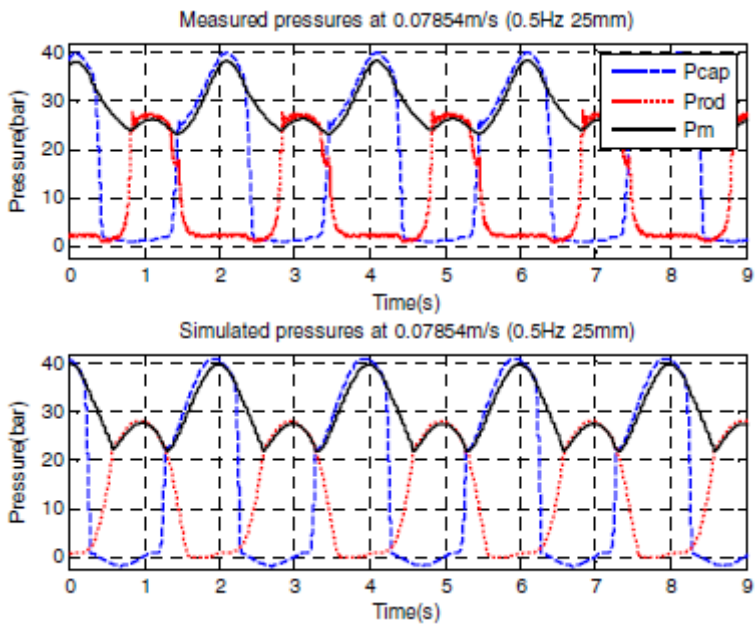

Figure 2. Measured and simulated pressures at 0.5Hz 25mm

V CONCLUSION

A regenerative shock absorber system is set up and tested, which utilizes hydraulic and mechanical transmissions so that it can convert the linear motion into rotary motion to generate electricity by excitation input. A dynamic modelling of regenerative energy shock absorber system has been analysed to guide the test system theoretically. The dynamic modelling and test system of energy regenerative shock absorber are evaluated and optimized with sinusoidal input. Hydraulic circuit used check valve to derive one-way flow. The results indicate that hydraulic circuit configuration regularizes the hydraulic flow to improve the efficiency of hydraulic motor in low-speed or high-pressure. In parallel, DC generator is provided much more stable shaft speed for high efficiency of energy regeneration. Meanwhile, the capability of energy regeneration in experiments at 0.07854m/s and 0.1256m/s obtains the average power 118.2W and 201.7W, while the total energy conversion are 26.86% and 18.49%.

REFERENCES

[1] Energy consumption in the UK. [Online]. Available: https://www.gov.uk/government/collections/energyconsumption-in-the-uk

[2] Electric Vehicle Battery Systems. p. 252, S. Dhameja, Newnes, 2001.

[3] D. Karnopp, “Power Requirements for Vehicle Suspension Systems,” Vehicle System Dynamics: International Journal of Vehicle Mechanics and Mobility, vol. 21, no. 1, pp. 65–71, 1992.

[4] S. A. Velinsky and R. A. White, "Vehicle Energy Dissipation Due to Road Roughness," Vehicle System Dynamics: International Journal of Vehicle Mechanics and Mobility, vol. 9, no. 6, pp. 359–384, 1980.

[5] L. Segel and X. Lu, "Vehicular resistance to motion as influenced by road roughness and highway alignment," Australian Road Research Board ARRB, vol. 12, no. 4, pp. 211–222, 1982.

[6] P. Hsu, "Power recovery property of electrical active suspension systems," In Energy Conversion Engineering Conference, Proceedings of the 31st Intersociety, 1996, vol. 3, pp. 1899–1904 vol.3.

[7] L. Zuo and P. Zhang, "Energy harvesting, ride comfort, and road handling of regenerative vehicle suspensions," in *Proc. DSCC*, 2012, pp. 295–302.

[8] M. R. Jolly and D. L. Margolis, "Regenerative Systems for Vibration Control," Journal of Vibration and Acoustics, vol. 119, no. 2, pp. 208–215, Apr. 1997.

[9] Y. Aoyama, K. Kawabata, S. Hasegawa, Y. Kobari, M. Sato, and E. Tsuruta, "Development of the Full Active Suspension by Nissan," SAE International, Warrendale, PA, SAE Technical Paper 901747, Sep. 1990.

[10] K. Nakano, S. Nakadai and Y. Suda, "Study On the Self- Powered Active Vibration Control," 1999.

[11] K. Nakano, S. Nakadai and Y. Suda, "Self-Powered Active Vibration Control with Continuous Control Input," JSME International Journal Series C, vol. 43, no. 3, pp. 726–731, 2000.

[12] Y. Suda, "Study on electromagnetic damper for automobiles with nonlinear damping force characteristics: road test and theoretical analysis," Dynamics of vehicles on roads and on tracks: proceedings of the 18th IAVSD Symposium held in Kanagawa, Japan , pp. 637–646, Aug. 2003.

[13] W. D. Jones, "Easy ride: Bose Corp. uses speaker technology to give cars adaptive suspension," IEEE Spectrum., vol. 42, no. 5, pp. 12–14, May. 2005.

[14] Michelin re-invents the wheel, [Online]. Available: http://www.sae.org/mags/aei/4604

[15] J. H. Beno, D. A. Weeks, D. A. Bresie, A. M. Guenin, J. S. Wisecup, and W. Bylsma, "Experimental Comparison of Losses for Conventional Passive and Energy Efficient Active Suspension Systems," SAE International, Warrendale, PA, SAE Technical Paper 2002-01-0282, Mar. 2002.

[16] J. Mossberg, Z. Anderson, C. Tucker, and J. Schneider, "Recovering Energy from Shock Absorber Motion on Heavy Duty Commercial Vehicles," SAE International, Warrendale, PA, SAE Technical Paper 2012-01-0814, Apr. 2012.

[17] Z. Fang, X. Guo, L. Xu and H. Zhang, "Experimental Study of Damping and Energy Regeneration Characteristics of a Hydraulic Electromagnetic Shock Absorber," Advances in Mechanical Engineering, May. 2013.

[18] W. Hoffmann, "Dynamic behavior of hydraulic systems, automatic model building and digital simulation". Ph.D. thesis RWTH Aachen, 1981.