REJECTION REDUCTION BY PARETO ANALYSIS

Prashant Biswas[1],Varun Sharma[2], Sonu Sharma[3]

[1,2,3]*Mechanical Department, SGIT, (India)*

ABSTRACT

The word "technology" encompasses essentially three meanings: tools and instruments to enhance human ability to shape nature, solve problems and culture. In this research we concentrated on a manufacturing Industry to analyze their use of a Non- Renewable Resource i.e. Metal, However in nature ,metal is present in a vast amount but their formation takes thousands of years. We therefore concentrated on industries process and Metal rejections. In present scenario all manufacturing companies are providing approach to work at optimal level and minimum rejection as much possible, we did our research work in Magnum Steel Industry Ltd, Gwalior. The industry mainly manufactures leaves of spring which are used in various automobile companies. Here we analyze that there are rejection and rework during production process. We concentrated on rejection during manufacturing and chose the highly rejection reduction of metal by implementing Pareto analysis and Cause effect Diagram (CED) as a tool. We expose the problem area and give appropriate solution and suggestion, which results in reducing the rejection. We have identified and removed the defects and minimized variability in manufacturing due to which vast wastage of metal, fuels, electricity etc were restricted. This Research work can be considered as a systematic and collective approach to reduce the rejection or wastage of resources during production or during all operation such as raw material, conveyer, roller, cutting, casting, welding, and furnace etc. because knowledge of how to create things or how to solve problems may led to reduction in wastage of resources.

Keywords: Cause Effect Diagram, Non-Renewable Resources, Pareto Analysis, Rejection, and Reduction.

I. INTRODUCTION

Our trend is unsustainable for a number of reasons: threats of man-made, climate change by greenhouse gas emissions, the rapid depletion of fossil fuels, rising energy prices due to increasing demand.

The most important in all is the Rapid depletion of fossil fuels; nowadays we are just engaged in using some of the non- renewable resources and utilizing them to complete our needs.

This paper is based on research work done for % reduction during the manufacturing process in industry. The research work has been done in Magnum Steel Industries Ltd, Gwalior. The productions that take place in this company are leaves spring, tor, steel pipes etc and the production methods used are rolling, heating, casting,

cutting etc which are engaged with the consumption of different resources. We have seen that during production process the maximum rejection occurs, which was approximate 20% per month in overall production in leaves spring. We used modified cutting machine with Pareto analysis and CED technique and succeed in minimizing the rejection during production from 15.91% to 13.53% and major rejection by cutting machine i.e. 9.48% was reduced by its modification (Guided, stopper and attaching conveyer etc) to 5.38%.

In this we started our research work by collecting and listing all the complaints and causes using data from company stock register. All the complaints were main causes of these defects, fish bone diagrams were prepared for each defect. We had tried to find out the reason of complaints defects in manufacturing, causes of defects, analysis and their cutting process. All the complaints were collected and Pareto analysis was used to estimate 20% defects responsible for major losses by this technique ten defective processes found were Raw material, conveyer, roller, cutting, casting, welding, pusher, furnace, peeling and inspection.

As the solution of this problem we used ***Pareto analysis*** as By Pareto analysis we can sort all different defects with their relative significance to the total rejection. Pareto diagrams can therefore be particularly useful in defining the targets. Pareto charts shows the most frequently occurring factors and help to make the best use of limited resources by pointing at the most important problem's to tackle. The Pareto Principle states that only a "vital few" factors are responsible for producing most of the problems. This principle can be applied to the Quality improvement to the extent that a great majority of problems (80%) are produced by a few key causes (20%). If we correct these few key causes, we will have a greater probability of success. This method is used to quickly focus on key causes of problem. It can be used after doing a Cause and Effect analysis, to count the frequency of different casual factors, and to identify problems. It can be used as-

1. Gather data on the frequency of the causes using a tally sheet. Rank the causes from the most to the least important and calculate the cumulative percentage (i.e. first percentage plus the second percentage and so on).
2. Draw a horizontal axis (x) that represents the different causes, ordered from the most to least frequent.
3. Draw a vertical axis (Y) with percentage from 0 to 100%
4. Construct a bar graph based on the percentage of each cause.
5. Construct a line graph of the cumulative percentage.
6. Draw a line from 80% on the Y axis to the line graph, and then drop the line down to the X axis. This line separates the important causes from the trivial ones.

Rejection data of last two years were analyzed with collected data of rejection of last year (2014). Various defects in various processes wise rejections were analyzed as

TABLE-1 Process wise Rejection of Leaves Spring

 ISBN: 978-81-931039-7-5

S.NO	PROCESS	DEFECTS	% In REJECTION LEAVES OF SPRING
1	Raw material	Plastic, Claw, etc	1.17
2	Casting	Penal, Crack, slag	1.31
3	Welding	Piping, Minor crack	1.78
4	Pushing	Bend, Bearing failure, patches	0.71
5	Furnace	Temperature maximum, Low heating etc	1.28
6	Peeling	Popper	1.26
7	Roller	Gapping, Bearing Failure	0.85
8	Cutting	Over cutting, V- cutting, cracking	9.48
9	Conveyor	Jamming, Bearing failure	1.36
10	Inspection	Gauge, Eye	0.80

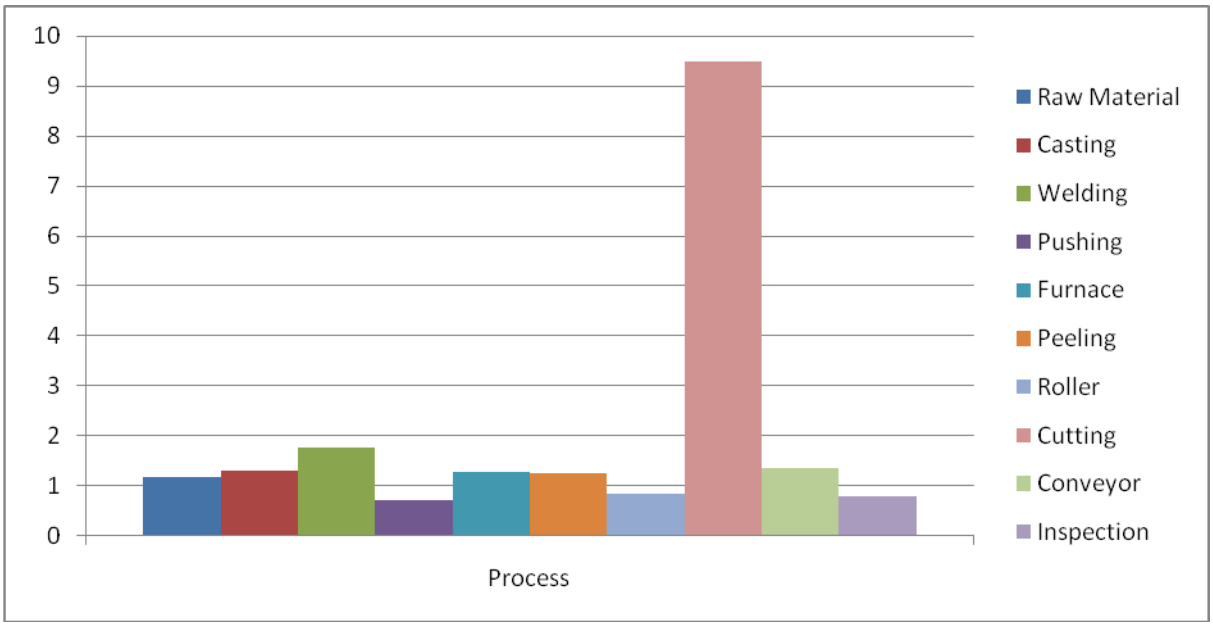

Fig. (1) - % of Total Defects in Production

 ISBN: 978-81-931039-7-5

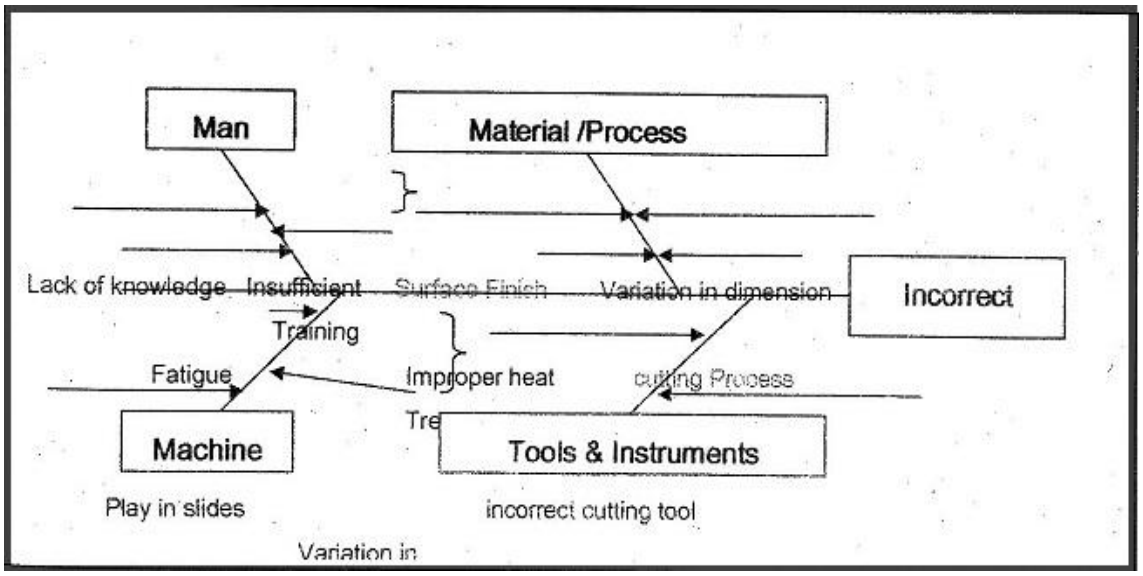

Fig. (2) – Fish Bone Diagram

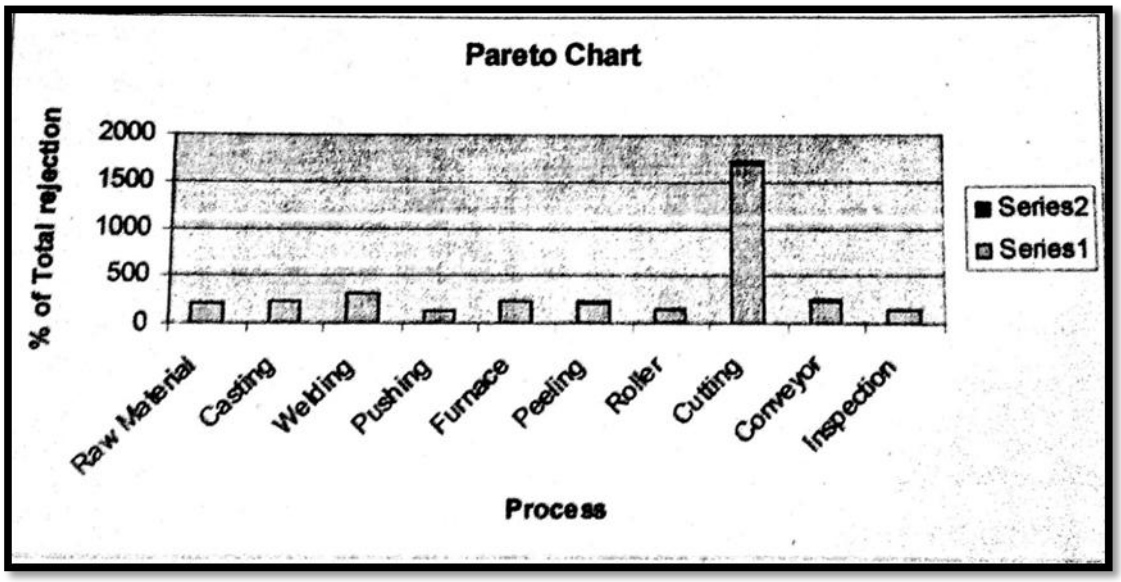

Fig. (3) – Pareto Chart

By analyzing data and making a Pareto chart, It was found that the major rejection of the metal during production of leaves spring is due to incorrect cutting operation. Thus it was chosen to be improved so that the rejection may be reduced. After this certain modifications were performed on the cutting machine so that it may avoid all the defects up to a high level and can actually save the metal and resources used during the production.

II. PROBLEMS IN CUTTING MACHINE

There are some problems in Cutting Machine before cutting process in leaves separated in requirement of order in automobile company. The Magnum steel industry has to face rejections like Cracking, V-cutting, over cutting, short cutting, Suddenly fall in cutter etc.

 ISBN: 978-81-931039-7-5

III. MODIFICATION

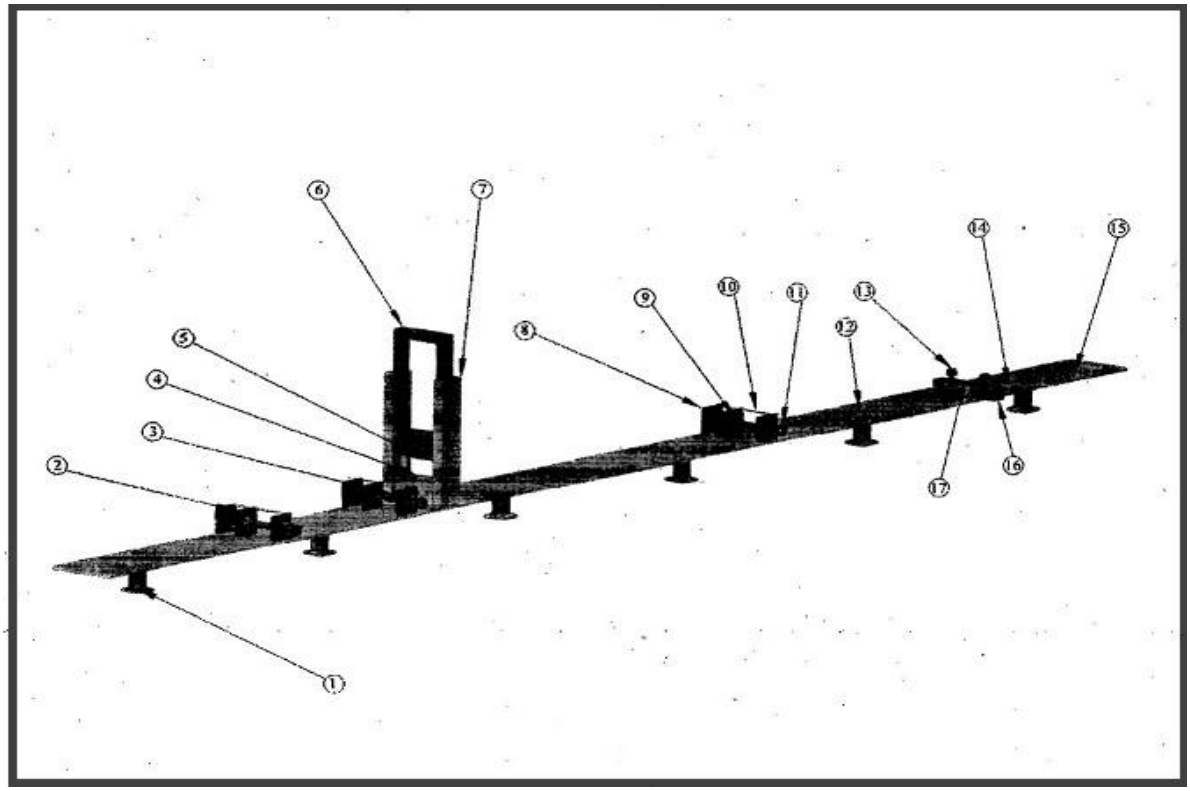

Fig. (4) – After Modification Cutting Machine

IV. NAME OF MODIFIED PARTS

1. Base of Platform
2. Movable guided
3. Fixed Guided
4. Base of Bled
5. Cutting Bled
6. Movable farm in cutting bled
7. Fixed fare
8. Plate of Guided
9. Bicol of Guided
10. Balance of Guided
11. Guided Bolt
12. Nut and Bolt
13. Nut of stopper
14. Scale
15. Base of cutting Machine
16. Stopper Bend
17. Stopper.

 ISBN: 978-81-931039-7-5

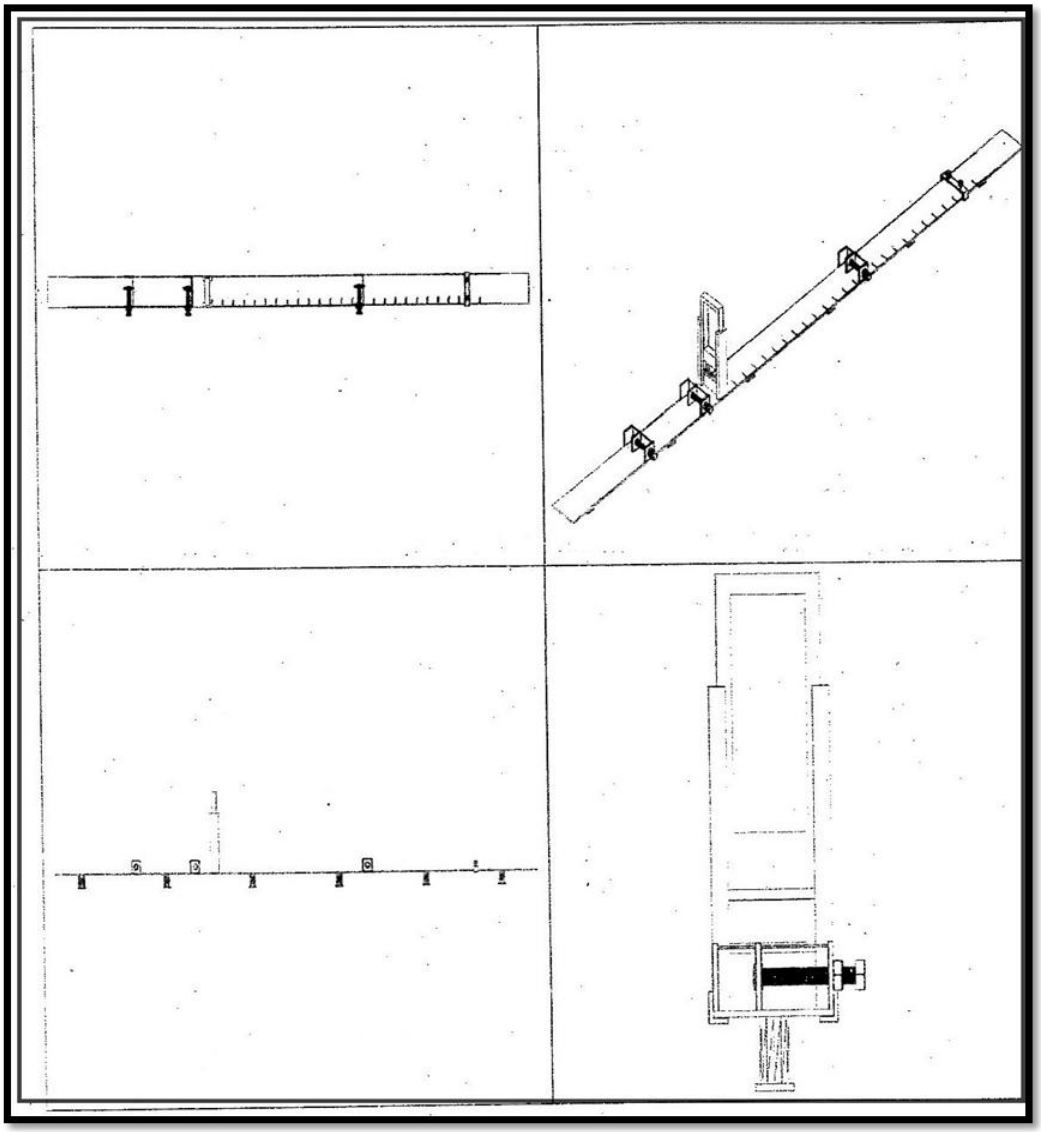

Fig. (5) – Front View, Top View, Side View of Modified Cutting Machine

TABLE (2) After Modification, % of Rejection

 ISBN: 978-81-931039-7-5

S.NO	PROCESS	TYPES OF DEFECTS	BEFORE MODIFICATION % IN REJECTION	AFTER METHOD % IN PRODUCTION
1	Raw material	Plastic, Claw	1.71	0.96
2	Casting	Penal, Crack, Slag	1.31	1.05
3	Welding	Minor Crack	1.78	1.15
4	Pushing	Bend, Bearing	0.71	0.64
5	Furnace	Max. Temperature, Low heating	1.28	0.74
6	Peeling	Popper	1.26	1.02
7	Roller	Gapping, Bearing Failure	0.85	0.72
8	Cutting	Cracking, Over cutting, V cutting, rough cutting	9.48	5.38
9	Conveyor	Jamming, Bearing Failure, Bending, Cracks in roller	1.36	1.13
10	Inspection	Gauge, Eye	0.80	0.74

TABLE (3) - After Modification Total Rejection in Rupees

	REJECTION IN 2014					
	MAY	**JUNE**	**JULY**	**AUGUST**	**SEPT**	**OCT**
NO. OF PIECES REJECTED	**870**	849	830	810	800	770
AMOUNT IN Rs	2349000	2292300	2100000	2045100	2010000	1900000

V. CONCLUSION

- It is necessary to counter checked the purchased raw material in quality and quantity before using it in production by doing this the rejection due to raw material defect can be reduced and moreover the wastage of raw material too.
- To reduce the defects during casting and in turn the rejection percentage the furnace temperature should be carefully maintained as sometimes the Furnace reaches beyond the maximum permissible temperature for the particular material which make material useless so use of fire bricks, thermal insulation can reduce the rejection rate.
- In order to minimize the losses for welding process some technicians and skilled labors should be appointed so that the wastage could be minimized up to a high level.

- The cause of failure in the pusher process is due to mishandling of material by the concern worker engaged so skilled labor should be employed so that mishandling could be avoided.
- The leaves should be inserted properly between the roller and checked regularity moreover grassing and oiling can reduce rejection rate and in turn can save the wastage of resources.

In my research work effort has been done to reduce rejection because ultimately rejection plays the important role to decide the sustainability i.e**. capacity of something to be maintained** so to make a sustainable environment with the help of technology we should first concentrate on reduction of the wastage due to our activities. We found that the total rejection in Magnum Steel Industry was too high i.e. 20% in overall production per year. By controlling the Manufacturing operation and modifying the cutting machine the rejection was controlled and also the wastage of the resources like Metals, Fuels, and Electricity etc.

REFERENCES

[1] Hocken R.J (1980) Technology of machine tools, vol 5: machine tool accuracy

[2] Ramesh R., Mannan, M.A & Pool, A.N (2000) error compensation in machine tools.

[3] Gebert, H., Geib, M., Kolbe, L., & Riempp, G. (2002).

[4] Smith, S 'Towards a more intelligent planning system" lnt J Project Management

[5] Robbins SP. Organization theory: structure, design and applications. Englewood Cliffs, NJ: Prentice-Hall; 1990

[6] Gebert, H., Geib, M., Kolbe, L., & Riempp, G. (2002).

[7] kiridena, V. & Ferreria, P.m. (1993) Positioning errors in five axis CNC machine.

[8] Fan, K.K.C Burdekin, M. (1986) development of a computer software package for positioning accuracy calibration.

[9] Trankle H. (1980) Effects of position errors in five axis milling processes.

[10] Hockenberger.MJ & Demeter, EC (1996) the applications of metafunction to the quasi static analysis of work piece displacement with in a machine fixture.

[11] Russell-Hodge. J L 'One person's process is another person's project" MRG Seminar Paper Management Research Group