3rd International Conference on Recent Innovations in Science Engineering and Management
Sri Venkateswara College of Engineering and Technology,Srikakulam,Andhra Pradesh (ICRISEM-16)
27 February 2016, www.conferenceworld.in ISBN: 978-81-932074-1-3

PRIORITY BASED LOAD RESTORATION USING MAS

K.Anisha[1], Dr.M.Rathina Kumar[2], P.Ganesh Venkata Siva Teja

[1]Assistant Professor, Professor, Department of Electrical & Electronics Engineering SCSVMV University, Kanchipuram, TamilNadu, (India)

[3]Department of Electrical & Electronics Engineering SCSVMV University, Kanchipuram, Tamil Nadu, (India)

ABSTRACT

The main objective of this paper is Load Restoration based on Priority. To distribute the quality and reliable power to the consumer is the vital role taken by the distribution system. Thus Distribution Automation is required for fault identification[4], isolation and restoration of loads in an efficient manner. In this paper says step by step load restoration based on priority by using multi agent method. The Physical system was simulated using MATLAB/Simulink and the agents were created using JADE (Java Agent Development Environment).

Keywords: Distribution system, Load restoration, Multi Agent

I. INTROUDUCTION

When a fault arise in a power system it is necessary to isolate the faulty section from the healthy section to minimize the effect of fault as well as to prevent the spreading of fault to the unfaulted region. Thus when a fault is identified, it is required to open the corresponding circuit breakers to isolate the fault to protect the power system from damage.[1-2]

These techniques require a centralized controller to process the data and decision making. Furthermore this centralized controller does not have the flexibility to adapt to the future structural modifications of the power system and it is required to redesign for each changes that have been made in the power system. One shortcoming of these algorithms is that they can only be applied to certain powersystems of radial structures. These drawbacks can be overcome by a Multi-agent system, which is a distributed control scheme. Multi agent technology proves its ability to solve many complicated problems of power systems. Multi-agent system offers their intrinsic benefits of flexibility, extensibility, autonomy, reduced maintenance and more [3]. In this environment Multiple agents can communicate with each other and can have a vision about the environment. Agents can communicate with each other through the FIPA (Federation of Intelligent Physical Agents) compliant Agent Communication language.

The agents are

Autonomous: An agent is autonomous because it operates without direct intervention from humans or other agents and has control over its actions and internal state. This implies that, an agent can decide whether or not to perform an action on request from another agent. [4].

ISBN: 978-81-932074-1-3

Reactivity: An agent is reactive by being able to perceive its environment and respond to changes in this environment according to its design objectives.

Proactiveness: An agent has the ability to perform goal directed behavior by taking the initiative without external stimulus; hence it is not only reactive.

Social ability: An agent has a social ability because it communicates with other agents to satisfy its design objectives[4].

Thus the MAS has the ability to make any complicated decision making process as simple as possible in a distributed way.

Circuit description:

The proposed circuit is given in Fig.no.1. B1, B2…… B9 are the bus number, G is the Generator, each generating 100 MW

Bus number 2 3,5,6,8& 9 are connected with load. The priority assigned to the loads are given in Table. no.2

Load with P1 is having highest priority & P3 is the least priority. The Load with highest priority must be restored first, then the load with next highest priority is served.

If the available power is lesser than the Load capacity, then that particular load with least priority must be shut down i.e; Load shedding has to be carried out by restoring all the critical loads and other loads with highest priority.

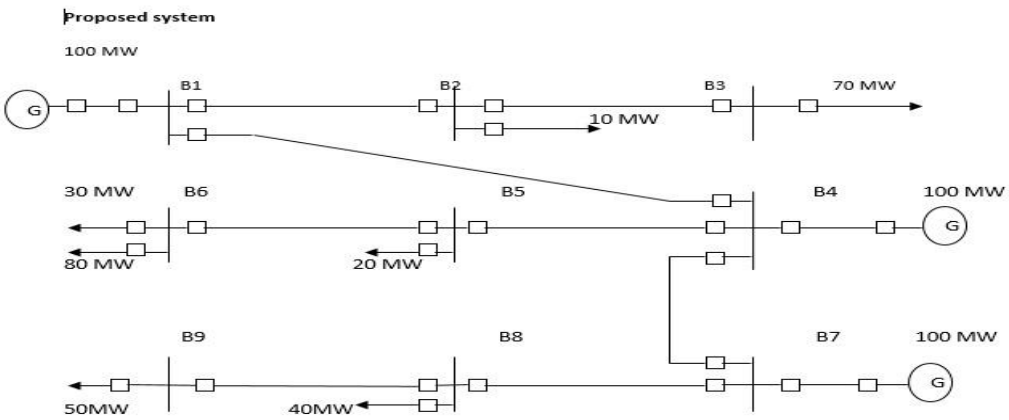

Fig.No.1.Proposed 9-bus system

II. DESCRIPTION OF AGENTS

Generator fault and bus fault were introduced and the analysis of possibility of restoration of partial or full loads is carried out using Mean metropolis methods given by yinliangxu.et.al

The agents were created using JADE. JADE platform consists of one or more containers. These containers provides the Java run time and the services needed for hosting and executing agents. There are three types of agents such as Bus Agents, Feeder Agents, Load Agents and Switch agents were created and these agents can communicate with each other through the Agent Communication Language (ACL).The Decentralized manner of decision making process adopted in this work makes the communication faster than the centralized controller used in the current distribution system.

ISBN: 978-81-932074-1-3

The average consensus theorem is used to discover the information. The information discovered for agent i using consensus theorem is given by yinliangxu.et.al is represented as

$$X_i^{k+1} = x_i^k + \sum_{j€n} a_{ij} (x_j - x_i)$$

Where as

$x_i^k$and X_i^{k+1} are the information discovered by agent i during K^{th} and $K+1^{th}$ iteration

$a_{ij}$is the coefficient for information exchanged between neighbouring agents i and j

The information discovery process is carried out by assigning each agent with a unique index I. The required information is found by initializing each agent with a nX3 information matrix. The information is discovered with the help of a converged matrix given in table.no.1

If any fault occur at generator connected with bus no.4, then the corresponding circuit breakers are opened to isolate the generator. So 100 MW power is lost. The Loads connected with that generator may not get the supply. The power available to the system is only 200 MW. This 200 MW has to be distributed to all the possible loads based upon the priority. If there is a shortage i.e.; power demand is greater than power generated, then some of the loads with least priority should be shedded and the other loads has to be restored.

Now for example the fault occurred at generator connected with bus 4. The loads 30MW, 80MW and 50MW cannot get the supply. These loads has to be restored by sharing power from other generators. [5]

Discovered information converged to the value of 3.33 (100-10-70+100-40-50) / 9. Since the average net power is positive, it is possible to restore part or all of the unfaulted loads.

Total generated power= 300 MW

Fault occurred at Generator with 100 MW

Available power = 300-100 = 200 MW

The Load with highest priority is restored first, P1 (30 MW), now the available power is 200-30 = 170 MW.No other loads are connected in P1 level. the loads with next priority level can be restored, the next priority is P2, four loads are having Priority P2. Load of 10 MW, 70 MW & 80 MW (10 + 70 +80 =160 MW)can be restored. After restoring P1 load the available power is 170 MW .

Thus 170 MW – 160 MW = 10 MW. Now, the available power is 10 MW.then the Loads with next priority level P3 can be restored. 20 MW load with P3 cannot be restored .This 10 MW is not sufficient to restore 20 MW i.e; power demand is greater than the power generated (available power). Thus the all the Loads (20, 40 &50 MW) to be shed.

ISBN: 978-81-932074-1-3

Table.No.2 Prioroty of The Load

BUS NO.	LOAD in MW	PRIORITY
2	10	P2
3	70	P2
5	20	P3
6	30,80	P1,P2
8	40	P3
9	50	P3

TABLE NO.1 Converged matrix for the 9-bus system

1/9	0	100/9
2/9	0	-10/9
3/9	0	-70/9
0	4	-100/9
0	5	-20/9
0	6	-110/9
7/9	0	100/9
8/9	0	-40/9
9/9	0	-50/9

Table.No.3 Generation and Load Tally Details

Bus No.	**Neighbouring bus**	**P_{Gi}**	**P_{Li}**	**X_i (PGNet available)**
1	2,4	100	0	100
2	1,3	-	-10	-10
3	2	-	-70	-70
4	1,5,7	100	0	100
5	4,6	-	-20	-20
6	5	-	-110 (80+30)	-110
7	4,8	100	0	100
8	7,9	-	-40	-40
9	8	-	-50	-50
∑net				0

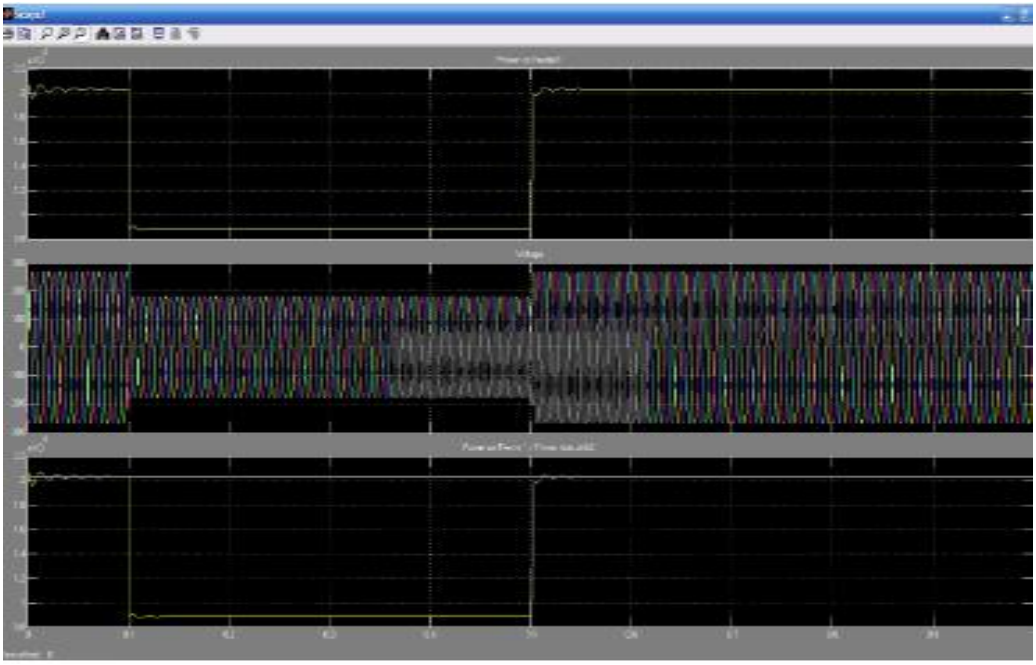

Fig.No.2. Simulated output showing power restored after fault

III. CONCLUSION

The restoration strategy of a distribution network has been presented. A prioritizing strategy for restoring certain loads in case of shortage of power has been proposed. The critical Loads were restored. It reveals that the MAS technology is the fastest and efficient method for restoration of power in a distribution system [4]

REFERENCE

[1] Il-Hyung Lim, Tarlochan S. Sidhu, Myeon-Song Choi, Seung-Jae Lee, SugwonHong, Seong-Il Lim, Sung-Woo Lee "Design and Implementation of Multiagent-Based Distributed Restoration System in DAS".IEEE Transactions on Power Delivery Vol 28, No.2 ,April 2013.

[2] Yinliang Xu, Student Member, IEEE, and Wenxin Liu, Member, IEEE" Novel Multiagent Based Load RestorationAlgorithm for Microgrids",IEEE Transactions on Vol 2, Issue 1.

[3] Murali Krishna Kouluri1,a, Pandey R K1,b1Department of Electrical Engineering, Institute of Technology, Banaras Hindu University "Intelligent Agent Based Micro grid

[4] Anisha K, Dr.M.Rathinakumar, Prakash K, Application of Multi Agent System for Distribution System Automation 978-1-4799-4103-2/14/2014 IEEE

[5] S.–I. Lim, S.–J. Lee, M. –S. Choi, D.-J. Lim, and B.-N. Ha, "Service Restoration Methodology for Multiple Fault Case in Distribution Systems", IEEE Trans. on Power Systems, Vol. 21, No. 4, pp. 1638-1644, 2006.

[6] T.Sakaguchi,andK.Matsumoto,"Development of Knowledge Based System for Power System Restoration", IEEE Trans. on Power Apparatus& Systems, Vol. PAS-102, No. 2, pp. 320-329,1983.

[7] G. Lambert-Torres, H. G. Martins, M. P. Coutinho, C. P. Salomon, and F. C. Vieira, "Particle swarm optimization applied to system restoration," Proc. Power Tech IEEE Bucharest, pp. 1–6, 2009.

[8] J. Gutierrez and M. Staropolsky, "Policies for Restoration of a Power System", IEEE Trans. on Power Systems, Vol. PWRS-2, No. 2, pp. 436- 442, 1987

[9] Nagata, H. Sasaki, "A Multi-Agent Approach to Power System Restoration", IEEE Trans. on Power Systems, Vol. 17, No. 2, pp. 457- 462, 2002.

[10] J. M. Solanki, S. Khushalani, and N. N. Schulz, "A Multi-Agent Solution to Distributed System Restoration", IEEE Trans. on Power Systems, Vol. 22, No. 3, pp. 1026-1034, 2007